VALLEY CENTER
DESIGN STANDARDS

FOR

WATERLINE, SANITARY SEWER, PAVING AND DRAINAGE

ADOPTED FEBRUARY 6, 1996
BY VALLEY CENTER CITY COUNCIL

PEC PROJECT NO. 35-89355-008-2502

UPDATED MARCH, 2008

THE CITY
OF
VALLEY CENTER, KANSAS

STANDARD ENGINEERING DESIGN CRITERIA
AND
GENERAL IMPROVEMENT POLICY

TABLE OF CONTENTS

SECTION I - GENERAL

- Purpose
- Scope
- Variation from Design Criteria
- Compliance with Applicable Statutory Requirements
- Amendment to Standard Engineering Design Criteria
- General Development Plan or Plat

SECTION II - STREETS

- Pavement
- Subgrade
- Curb and Gutter
- Geometric Design Criteria
- Sidewalks
- Driveway and Alley Entrances
- Installation of Culverts
- Street Signing
- Erosion Protection
- Partial List of Standard Bid Items

SECTION III - STORM DRAINAGE AND FLOOD CONTROL CRITERIA

- General
- Storm Sewers, Manholes, and Inlets
- Open Channel Requirements
- Methods of Estimating Runoff (Return Frequency)
- Trench and Backfill Requirements
- Conveyance System Capacities
  1. Pipe
  2. Open Channels
  3. Inlets
- Detention Storage Requirements
- Easement Requirements

THE CITY
OF
VALLEY CENTER, KANSAS

STANDARD ENGINEERING DESIGN CRITERIA
AND
GENERAL IMPROVEMENT POLICY

TABLE OF CONTENTS

SECTION IV - SANITARY SEWER DESIGN CRITERIA

General
Sanitary Sewers, Manholes and Cleanouts
Trench and Backfill Requirements
Minimum Pipe Slopes and Capacities
Acceptance Test of Sewers and Manholes
Wastewater Pumping Stations
Protection of Water Supplies
Easement Requirements
Sanitary Sewer Service Connections

SECTION V - WATER SYSTEM CRITERIA

General
Waterlines, Fittings, Valves and Fire Hydrants
Trench and Backfill Requirements
Waterline Sizing
Valve and Fire Hydrant Spacing
Acceptance Tests of Waterlines
Disinfection Procedures
Easement Requirements
Separation of Water Mains and Sanitary Sewers
Water Services

SECTION I. GENERAL

A. Purpose

The City of Valley Center is striving to provide uniformity in construction efforts involving public works. To accomplish this it is important that initial design comply with established standards, NPDES permit and specifications approved by the City. In addition to initial design, there are many construction activities which will not require design and construction documents, but which must also comply with uniform City standards. The following document will serve as the standard guideline for all public works construction and design.

B. Scope

This document includes design criteria and typical construction details for Streets and Trafficways, Storm Drainage and Flood Control, Sanitary Sewer, and Water Systems. In addition a brief material specification will be outlined.

C. Variation from Design Criteria

Variations will be permitted from the Standard Engineering Design Criteria and General Improvement Policy when a formal request is made to City Staff. The request will involve the following:

1. List any and all variations being requested.
2. Provide a justification for each variation in writing. In the case of a detail, provide a sketch or an engineered drawing indicating the modification requested.
3. Request a formal meeting with City Staff to discuss the suggested variation.
4. Obtain in writing an approval of the modification.
5. Lot corners must be surveyed and certified by a licensed land surveyor.

Special circumstances may be encountered where a specific item is not included in the Standard Engineering Design Criteria and General Improvement Policy. If this occurs, a formal request shall be made to City Staff and shall meet the requirements as shown above for a variation.

D. Compliance with Applicable Statutory Requirements

Compliance with all Federal, State and Local Laws will be required. Where permits are required by Federal, State and Local Agencies, the Project Owner will be required to complete all filing, pay all fees, and obtain an approved permit. All information including maps, plans, specifications, completed permit application, etc., required to obtain an approved permit shall be provided to the City.

E. Amendment to Standard Engineering Design Criteria

Amendments to the Standard Engineering Design Criteria and General Improvement Policy will be approved by the City. The Amendments will be made available by the City for insertion into this document. It is the responsibility of the holder of this document to assure themselves that they have all the amendments or a current document.

F. General Development Plan or Plat

Any development plan or proposed plat shall be submitted to the City with utilities and pavement generally located within the boundary of the plan or plat. For plats the utilities will be located within dedicated easements and right-of-ways. The general development plan or plat shall show preliminary elevations for all sanitary sewers, streets, and storm drainage conveyance systems. In addition, the project owner for a plat shall submit an overall drainage plan and a four-corner lot-grading plan indicating elevations at each lot corner for the subdivision he is developing. The four-corner lot-grading plans will be placed on file with the City and will be reviewed during requests for building permits.

Where backyard drainage is planned, the minimum total width of the easement shall be 25'. All easements shall be platted as drainage and utility easements. Minimum pad elevations (or low opening) shall be established for all platted lots.

The developer will be required to have the four-corner lot grading plan revised upon completion of the infrastructure improvements and prior to issuance of any building permits. Revisions to the four-corner lot grading plan shall be performed by the platting engineer, with revised grades being provided as necessary by the street/drainage designer.

G. Pavement Cut/Use of Right-of-Way

All Work performed within public right-of-way shall be coordinated with the Public Works Department of the City. Prior to performing any work, a use of right-of-way permit shall be obtained from City Hall, City of Valley Center.

H. NPDES Permit

A City of Valley Center permit is required for any area disturbed by construction activities. Any project that will disturb one acre or more will be required to have a Notice of intent (N.O.I.) to discharge stormwater from the project site. No work will be allowed prior to furnishing a Division of Water Resources approved copy of the N.O.I. to the City. Also, all projects will be required to have erosion protection and Best Management Practices in place, regardless of the area disturbed.

SECTION II. STREETS

All street improvements shall be designed and constructed to City Engineering Standards and Specifications, as outlined in this section. Standard typical section details for asphalt pavement are included as Figure II-1.

A. Pavement

1. Types

Standard pavement for City street projects shall generally be one of the following types:

- Asphaltic Concrete
- Reinforced Concrete
- Reinf. Concrete Valley Gutter Pavt.

2. Minimum Thicknesses

Thicknesses for the various pavements will vary depending on the intended use. The table below shows minimum pavement depths to be used for City projects.

Type of Pavement	Residential	Collector Local Access Low Volume	Arterial, Commercial, or Industrial
Asphaltic Concrete	5"	7"	8"
Reinforced Concrete	6"	6"	7"

3. Width

In general, the width of city streets shall be determined by the platted right-of-way. Widths may occasionally vary to match existing conditions or to meet special requirements of a particular site. Listed below are common right-of-way widths and the corresponding back-of-curb to back-of-curb dimension requirements for the street to be constructed in that right-of-way.

Right-of-Way Width	Street Width (Back to Back of Curb)
64'	31' (35' Max.)
70'	41'
100'	71'
120'	71'

4. Bituminous Base under Curb & Gutter

On curb & gutter sections with asphalt pavement, the first lift of asphalt base course shall extend to a width of 2" behind each back of curb for 7" or thicker. The extra width of bituminous base shall be considered a

separate bid item and shall be measured and paid for separately from other asphalt pavement items.

B. Subgrade

1. Subgrade Type

Geogrid (BX 1100) as manufactured by Tensar Corporation or approved equal shall be installed beneath a 6" minimum thickness of crushed rock or crushed concrete. Crushed rock shall meet the requirements of Section 1105 Standard Specifications for State Road and Bridge Construction, Kansas Department of Transportation, 1990 Edition.

2. Limits of Subgrade

Crushed rock or crushed concrete subgrade shall be constructed to a width of 12" beyond the back of each curb line, unless otherwise approved by the City.

C. Curb and Gutter

1. Types

See Figure II-2 for the following standard types of curb and gutter to be used on City paving projects:

- Combined Curb & Gutter (6 5/8")
- Combined Curb & Gutter (3 5/8" Roll)
- Median Combined Curb & Gutter
- Monolithic Edge Curb (6 5/8")
- Monolithic Edge Curb (3 5/8" Roll)

2. Construction Requirements

a) Joints
Contraction joints shall be placed in curb and gutter at intervals of 10 feet or less. Expansion joints shall be installed at the end of all curb returns and approximately every 250 feet on long runs.

b) Curb Through Driveway Approaches
Sawcutting of roll type curb for driveways will not be allowed, except with specific prior approval by City Staff. Where standard height curb is to be sawed for installation of driveways, the longitudinal sawcut shall be made 4 to 6 inches beyond the flowline of the gutter pan.

A permit for this work shall be obtained from the Public Works Department.

When driveway locations are known prior to construction of curb and gutter, the curb shall be installed with a height of 1-1/2 inches through the proposed entrance locations so that no sawcuts will be necessary.

c) Markings for valves, meters, and cleanouts
To facilitate locating water valves, water meters, and sanitary sewer cleanouts, a permanent marking shall be placed on the curb adjacent to each item. The marking shall consist of a letter at least 4" in height stamped into the face of the curb while the concrete is green. The letter "V" shall be used to mark water valve locations, "M" shall be used for water meters, and "S" shall mark sanitary sewer manholes.

D. Geometric Design Criteria

1. Alignment

a) Centerline
Streets shall be centered in the right-of-way unless special circumstances dictate otherwise. Deviations from centering the street in the right-of-way shall be made only by written approval from the City. Where a proposed street is an extension of an existing street, the centerline of the proposed street shall coincide with the centerline of the existing street as closely as is practicable.

b) Intersection Angle
Intersections shall be designed to be as close to 90° as possible. In no case shall the intersection angle be less than 80°.

2. Street Grades

Street grades shall be indicated on plans along the centerline of the roadway, except in cases of non-standard or unusual geometric configurations. On curved roadways, the centerline grade shall be calculated such that the minimum grade requirement is met for curb and gutter along the longest side of the curve.

a) Minimum Grade
To provide proper longitudinal drainage, the minimum allowable street grade shall be 0.50%, unless otherwise approved by the City Engineer.

b) Minimum Grade Across Valley Gutters
The minimum grade along the flowline of valley gutters shall be 0.50%, unless otherwise approved by the City Engineer.

3. Cross Slope

Cross slopes for pavements shall be as indicated below except for localized variations where necessary to match an existing pavement.

Type of Pavement	Minimum Allowable	Maximum Allowable
Asphaltic Pavement	3/8" per foot	1/2" per foot
Concrete Pavement	1/4" per foot	1/2" per foot

4. Minimum/Maximum Fall Around Curb Returns

The table below shows the minimum and maximum allowable difference in elevations between the PC and PT of curb returns for 90° intersections. For intersections with a "delta" of other than 90°, the elevation difference shall be prorated based on the values shown.

Curb Return Radius	Minimum Allowable	Maximum Allowable
20'	0.25'	1.00'
25'	0.30'	1.25'
30'	0.35'	1.50'
35'	0.40'	1.50'
40'	0.45'	1.50'
45'	0.50'	1.50'
50'	0.55'	1.50'

5. Curb Return Radii

a) Both Streets Curb and Gutter
Curb return radii for street intersections shall follow the guidelines in the following table when both streets are constructed with curb & gutter.

Type of Roadway	Intersecting With	Minimum Curb Face Radius
Residential	Residential	20 feet
Residential	Collector or Arterial	30 feet
Commercial, Collector or Arterial	Commercial, Collector or Arterial	50 feet

b) Curb and Gutter Intersecting Road with Ditch Section
Intersection geometries for intersecting a road without curb & gutter shall be as shown in Figure II-2. Radius requirements shall generally follow the requirements shown above.

6. Walk Grades

The finished elevation at the property lines (referred to as the "walk grade") shall generally be such that the slope between the back of curb and the property line is at least 1/4" per foot, but not more than 4

horizontal to 1 vertical. Exceptions may be made where absolutely necessary to match an existing situation.

7. Cul-de-sacs

Permanent cul-de-sacs shall have a face-of-curb radius of 35' for the main "bulb" and a radius of 20' for the throat returns (see Figure II-2). The bulb may be centered, or may be offset to the left or right as dictated by the right-of-way configuration.

A temporary cul-de-sac shall be constructed for any street which is more than 250 long and is temporarily terminated without an adequate provision for turnaround of emergency or commercial vehicles, such as fire trucks and school busses. Such temporary cul-de-sacs shall have, as a minimum, the same dimensions as a permanent cul-de-sac but are not required to be paved or have curb & gutter. Temporary cul-de-sacs shall include a gravel or light type surface.

E. Concrete Sidewalks

Sidewalks shall be constructed in conjunction with paving projects when required by the signed petition for the project. Sidewalks shall generally be located immediately adjacent to the right-of-way if possible; however, sidewalk location shall be adjusted where necessary to provide a smooth transition from an existing pedestrian walkway.

1. Width & Thickness
As a minimum, sidewalks on City projects shall be constructed to the dimensions shown in Figure II-2. Greater width or thickness is acceptable where requested by the owner or required due to special circumstances of a particular site. Walks subject to vehicular traffic shall be 6” in thickness.

2. Wheelchair Ramps
Wheelchairs ramps shall be provided at all curbed street crossings and any other locations which would act as a barrier to persons in a wheelchair. See Figure II-2 for minimum requirements for standard wheelchair ramps. Ramps shall meet all applicable ADA requirements.

Width	Application
10'	Trail
5'	Arterial with Bike Lane
5'	Arterial with sidewalk on both sides
10'	Arterial with sidewalk on one side
5'	Collector Streets
4'	Residential Streets

F. Driveway and Alley Entrances

Driveway or alley entrances shall be constructed with City paving projects when the paving abuts an existing driveway or alley. The entrance shall extend from the curb line of the street to the nearest property line. Wire mesh shall be used for reinforcement in pavement.

1. Width
For the purposes of design, the width of proposed drive and alley entrances shall match the existing drive or alley. However, the property owner may request, in writing, that a wider or narrower entrance be constructed. Except where approved by the City to match an existing condition, the minimum throat dimension shall be 12 feet for driveways or 20 feet for alleys, and the maximum throat width shall be 40 feet.

2. Return Types/Radii
Standard drive and alley entrances shall be constructed as shown in Figure II-5. Return radii for standard entrances are shown below.

	Minimum Radius	Maximum Radius
Residential Drive	10'-6"	10'-6"
Commercial Drive	15'-0"	40'
Alley	20'	40'

3. Drive Request
All driveway entrance construction shall be a direct assessment to the property served by the entrance. The owner of the property shall request or confirm, in writing, the width and location of the drive entrance. The owner may also request additional thickness or reinforcement if desired. If no request or confirmation is obtained from the Owner, the drive entrance shall be constructed to match the existing drive location and width.

G. Installation of Culverts (See culvert installation permit application)

1. On any street that has not been improved with curb and gutter, all driveways or other access ways to adjoining property which crosses a ditch or drainage way shall be improved with an approved culvert pipe supplied by the property owner.

2. Corrugated Metal Pipe (CMP) utilized for driveway culverts shall conform to the applicable requirements of Section 1905 of the Standard Specifications for State Road and Bridge Construction, Kansas Department of Transportation, 1990 Edition. CMP will not be allowed with less than one foot of cover over the top of the pipe.

3. Reinforced Concrete Pipe utilized for driveway culverts shall be Class III pipe. Joints shall be tongue and groove joints sealed with either flexible plastic gaskets or cement mortar.

4. Standards:
   Minimum Pipe Size:
   - Corrugated Metal Pipe – 15 inch diameter
   - Reinforced Concrete Pipe – 15 inch diameter

   All pipe sizes shall be determined by City Staff.

   Maximum Pipe Length:
   50 feet for each drive, unless specifically approved in writing by City Staff

   Minimum Distance Between Driveway Culverts:
   13 feet

   Pipe Ends:
   Culverts shall include a headwall, as approved by the Public Works Department, or end section be installed on each end.

   Culverts shall be long enough to provide a slope no steeper 5:1.

5. Installation:
   Grade:
   The grade for all culvert shall be determined and established by City Staff.

   Placement:
   The cost of the culvert pipe and the installation of the same shall be the responsibility of the property owner.

6. Permit:
   No driveway or access culvert shall be installed without first obtaining a permit from the City on a prescribed permit application form.

H. <u>Street Signing</u>

In general, design of paving projects shall include all necessary signing, including regulatory, warning, and street name signs. However, installation of certain regulatory signs, such as STOP signs, may be subject to approval by the City based on an engineering study. Standard street signing details are shown in Figure II-3.

1. MUTCD Requirements
   All signs and other traffic control devices, and the installation and use thereof, shall conform to the requirements of the latest version of the

Manual on Uniform Traffic Control Devices for Streets and Highways (MUTCD), published by the Federal Highway Administration. All devices shall be reflectorized on the side facing traffic.

2. Minimum Sizes
The minimum allowable size for regulatory and warning signs shall be the size denoted as "Standard" in the publication Standard Highway Signs published by the Federal Highway Administration.

I. Erosion Protection

All projects shall include the use of best management practices for erosion protection/pollution control. A NPDES Stormwater Permit shall be applied for on any construction site in the City. Best Management Practices for erosion protection/pollution control shall be in accordance with the NPDES permit, and the attached details (Figures II-4a through II-4d). All builders shall submit a Stormwater Pollution Prevention Plan for each lot that will be disturbed by construction activity.

J. Partial List of Standard Bid Item

To the extent possible, standard bid items shall be used in designing and bidding projects. Additional bid items will occasionally be necessary due to the varying nature of projects. A partial list of common bid items and their units of measurement are listed here for information.

X" Asphaltic Concrete Pavement	Sq. Yd.
X" Bituminous Base	Sq. Yd.
6" Reinforced Crushed Rock Base	Sq. Yd.
Combined Curb & Gutter (6 5/8")	Lin. Ft.
Combined Curb & Gutter (3 5/8" Roll)	Lin. Ft.
Monolithic Edge Curb (6 5/8")	Lin. Ft.
Monolithic Edge Curb (3 5/8" Roll)	Lin. Ft.
Median Combined Curb & Gutter	Lin. Ft.
X" Reinforced Valley Gutter Pavement (X" Reinf. Conc. Pavt./X" Bit. Base)	Sq. Yd.
Concrete Pavement (X" Uniform)(AE)	Sq. Yd.
Unclassified Excavation	Cu. Yd.
Asphalt Mat Pavement Removed	Sq. Yd.
Signing	Lump Sum
Temporary Project Seeding	Lump Sum
Permanent Project Seeding	Lump Sum
XX" RCP Storm Sewer	Lin. Ft.
XX" CMP Storm Sewer	Lin. Ft.
Std. Type 1A Curb Inlet (size)	Each
Std. Area Inlet	Each

Reinforced Concrete Manhole	Each
Site Preparation & Restoration	Lump Sum
Concrete Slope Drain	Lin. Ft.
Linear Channel Grading	Lin. Ft.
Erosion/Sediment Control (BMPs)	Lump Sum

END OF SECTION II

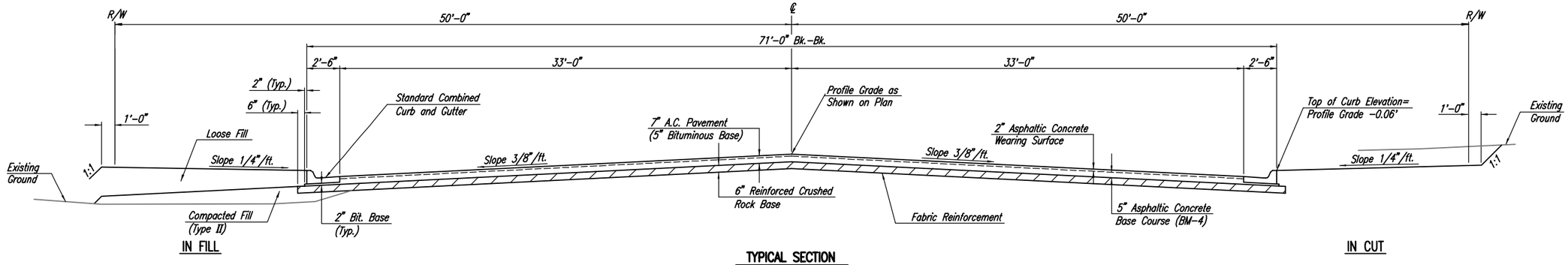

TYPICAL SECTION
71'-0" Back-Back Curb

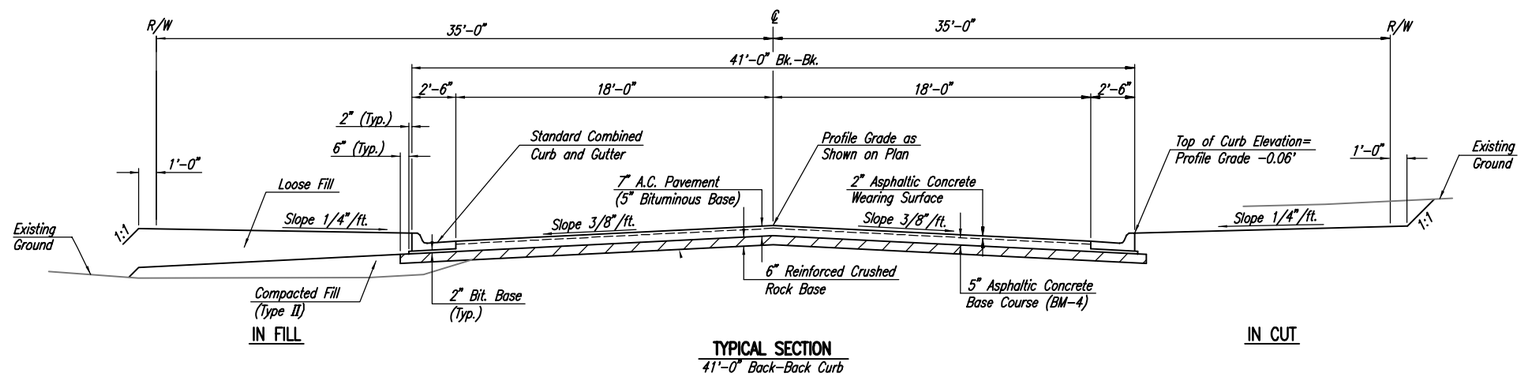

TYPICAL SECTION
41'-0" Back-Back Curb

SEE PROJECT SPECIFICATIONS FOR REINFORCED CRUSHED ROCK BASE REQUIREMENTS.

ROCK BASE IS TO BE COMPACTED AND SMOOTHED WITH A STEEL FACED ROLLER PRIOR TO PLACEMENT OF THE ASPHALT PAVEMENT. TACK COAT WILL NOT BE APPLIED TO ROCK BASE.

RECYCLED MATERIAL (RAP) SHALL BE ALLOWED FOR USE IN BITUMINOUS BASE AT A RATE NOT TO EXCEED 25% OF THE TOTAL AGGREGATE. THE COMBINED AGGREGATE SAMPLE, INCLUDING RECYCLED MATERIAL, SHALL CONFORM TO THE APPLICABLE SPECIFICATIONS. NO RECYCLED MATERIAL SHALL BE ALLOWED IN THE SURFACE COURSE.

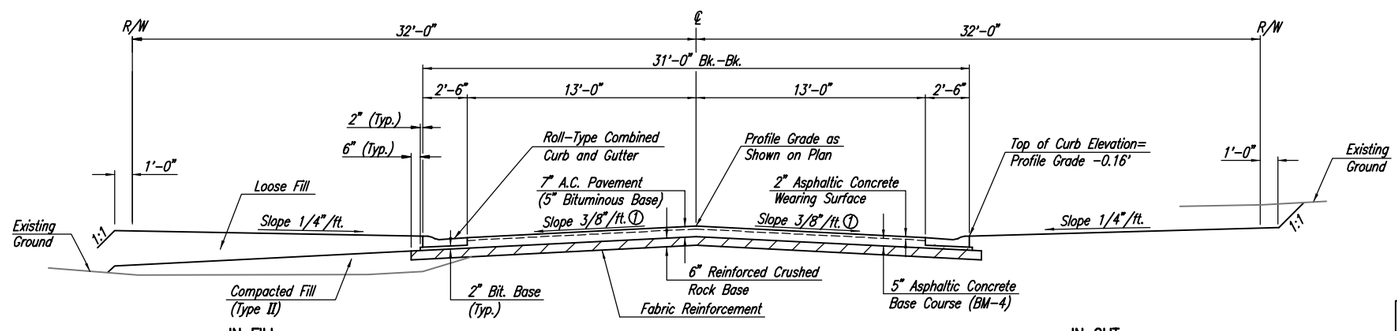

TYPICAL SECTION
31'-0" Back-Back Curb

① Unless shown otherwise on the Plans.

No.	Revision	By	Date
	JANUARY 2008		

CITY OF VALLEY CENTER
SEDGWICK COUNTY, KANSAS

STANDARD STREET PAVEMENT SECTIONS

Professional Engineering Consultants, P.A.
303 S. TOPEKA • WICHITA, KANSAS 67202
316-262-2691 • FAX 316-262-3003

Designed by	PEC	Job No.	Sheet of
Drawn by	PEC	Date JULY 2002	

Saved 04-04-2008 8:28:26 AM by REJ
Plot Scale 1:1.414 04-04-2008 8:44:47 AM
D:\1998\983520\001\2008 Updates\Figure II-01 by: REJ

FIGURE II-1

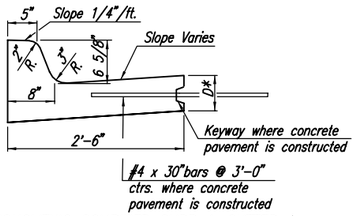

MONOLITHIC COMBINED CURB & GUTTER *
(6 5/8")

* AS SHOWN ON TYPICAL SECTION

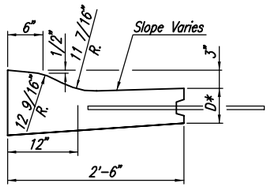

MONOLITHIC COMBINED CURB & GUTTER *
(3 5/8")

* AS SHOWN ON TYPICAL SECTION

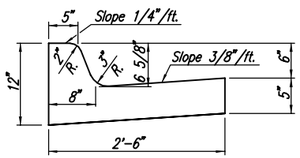

STANDARD COMBINED CURB & GUTTER
(6 5/8")

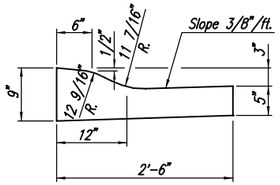

COMBINED CURB & GUTTER
(3 5/8")

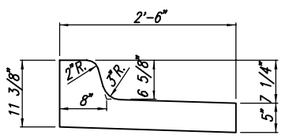

MEDIAN COMBINED CURB & GUTTER
(6 5/8")

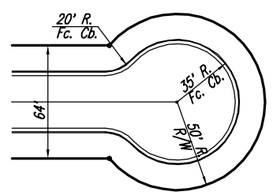

CENTERED

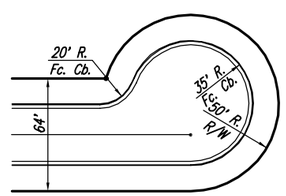

OFF CENTER

STANDARD CUL-DE-SAC LAYOUTS

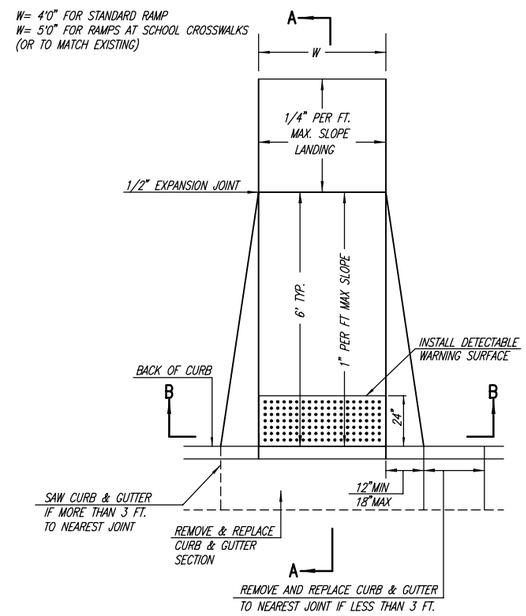

(TYPE A)
STANDARD WHEELCHAIR RAMP
WITH DETECTABLE WARNING
CONSTRUCTION DETAIL FOR STREETS
WITH COMBINED CURB & GUTTER

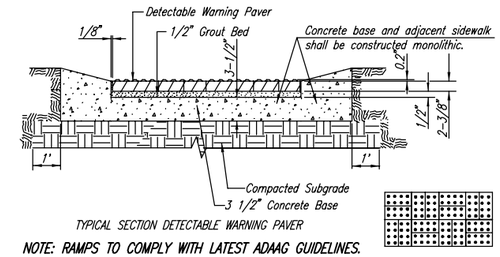

TYPICAL SECTION DETECTABLE WARNING PAVER

NOTE: RAMPS TO COMPLY WITH LATEST ADAAG GUIDELINES. PAVESTONE DETECTABLE WARNING PAVERS (OR AN APPROVED EQUAL) SHALL BE USED IN ALL WHEELCHAIR RAMPS. THE RED PAVER SHALL BE INSTALLED USING A BASKET WEAVE/PARQUET PATTERN. OTHER PATTERNS MAY BE USED WITH APPROVAL OF ENGINEER. SAND FILL JOINTS. ALIGN DOMES IN THE DIRECTION OF PEDESTRIAN TRAVEL.

SECTION B–B

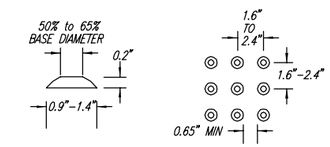

DOME DETAIL

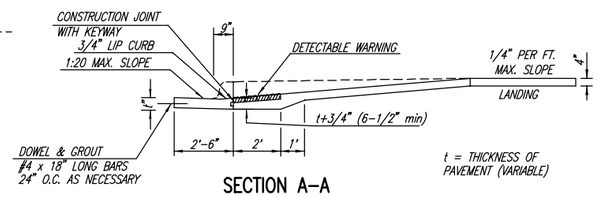

SECTION A–A

TYPICAL WHEELCHAIR RAMP DETAILS

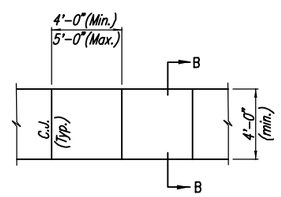

PLAN

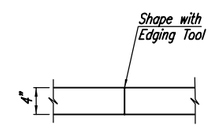

CONSTRUCTION JOINT

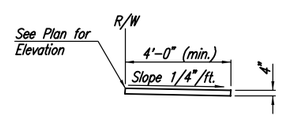

SECTION B–B

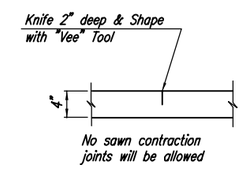

CONTRACTION JOINT

4" WALK DETAILS

No.	Revision	By	Date
	JANUARY 2008		

CITY OF VALLEY CENTER
SEDGWICK COUNTY, KANSAS

CURB, CUL-DE-SAC, AND SIDEWALK DETAILS

Professional Engineering Consultants, P.A.
303 S. TOPEKA • WICHITA, KANSAS 67202
316-262-2691 • FAX 316-262-3003

Designed by	PEC	Job No.	Sheet of
Drawn by	PEC	Date JULY 2002	

Saved 04-07-2008 6:50:06 AM by REJ
Plot Scale 1:1 Plot Date 04-07-2008 7:43:17 AM by: REJ
O:\1989\89355\001\02008 Updates\Figure II-02

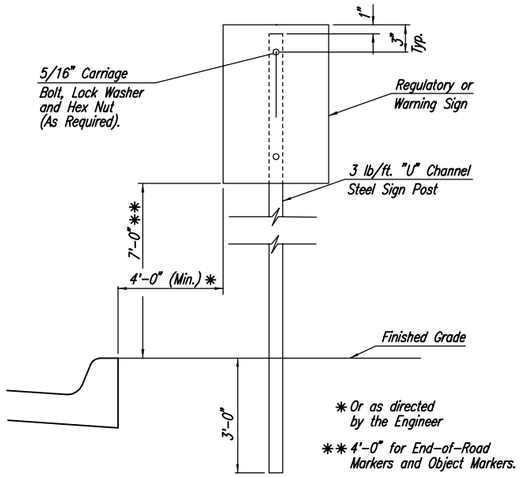

TYPICAL TRAFFIC CONTROL SIGN INSTALLATION
CURB AND GUTTER SECTION

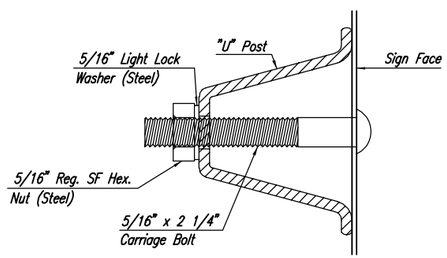

TRAFFIC CONTROL SIGN MOUNTING DETAIL

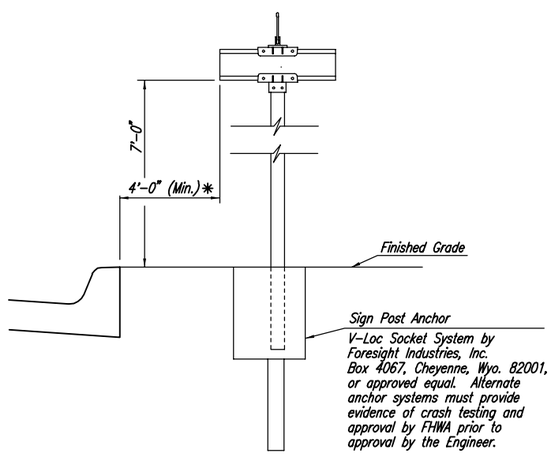

TYPICAL STREET NAME SIGN INSTALLATION
CURB AND GUTTER SECTION

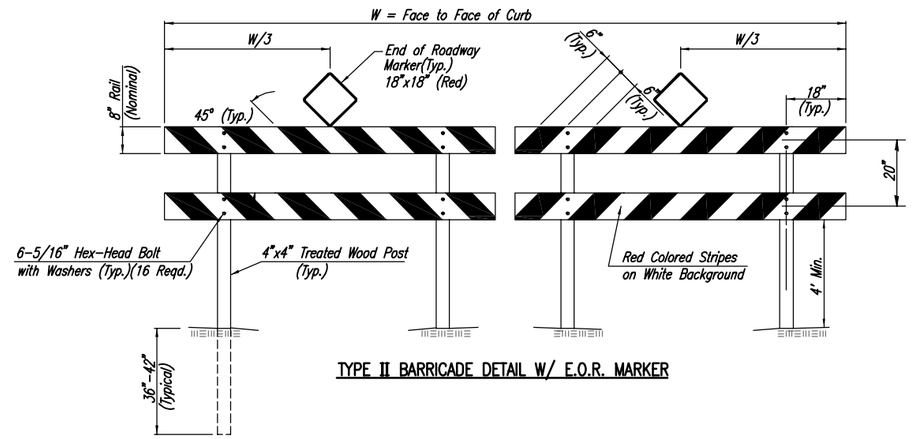

TYPE II BARRICADE DETAIL W/ E.O.R. MARKER

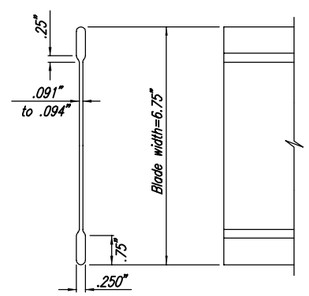

STREET NAME SIGN
BLADE DETAILS

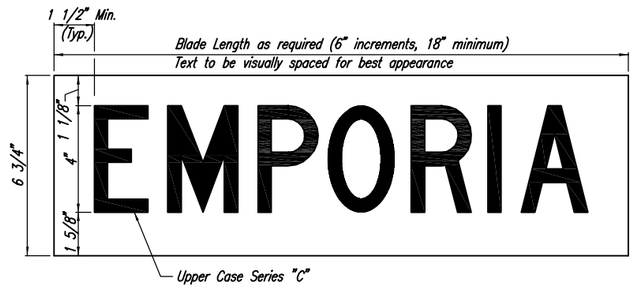

DETAIL A
6 3/4" STANDARD

SIGN ASSEMBLY TABLE				
STREET	STATION	OFFSET	SIGN	QUANTITY ≠
(SEE PLANS FOR LOCATIONS)			TYPE II BARRICADE	
TOTAL				

≠ FOR INFORMATION ONLY

STREET NAME	NO. BLADES REQ'D.	
	6 3/4" STD.	9" METRO
TOTAL		

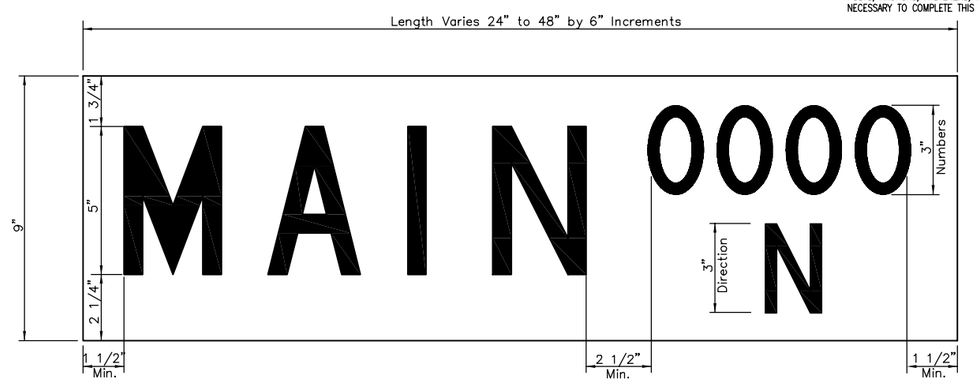

DETAIL B
9" METRO

GENERAL NOTES – SIGNING

NOTE: REFERENCES BELOW TO "STANDARD SPECIFICATIONS" DENOTE "STANDARD SPECIFICATION FOR STATE ROAD AND BRIDGE CONSTRUCTION, EDITION 1990" BY THE KANSAS DEPARTMENT OF TRANSPORTATION.

1. POST ANCHORS. POSTS SHALL BE ANCHORED WITH A YIELDING BASE POST SUPPORT AS DETAILED.
2. POSTS FOR TRAFFIC CONTROL SIGNS. POSTS SHALL CONFORM TO THE REQUIREMENTS OF SUBSECTION 1620 OF THE STANDARD SPECIFICATIONS EXCEPT THAT ALL POSTS SHALL WEIGH 3 LBS./FOOT MINIMUM.
3. POSTS FOR STREET NAME SIGNS. POSTS SHALL BE 9 FEET LONG, CONSTRUCTED FROM 2 3/8" O.D. GALVANIZED STEEL PIPE WEIGHING A MINIMUM OF 3.65 POUNDS PER FOOT. POSTS SHALL BE POSITIONED SO THAT THE BOTTOM BLADE IS 7 FEET ABOVE GRADE.
4. SIGN BLANKS FOR TRAFFIC CONTROL SIGNS. SIGN BLANKS SHALL BE FABRICATED FROM 0.080" ALUMINUM ALLOY 6063-T6 CONFORMING TO THE REQUIREMENTS OF SUBSECTION 1626 OF THE STANDARD SPECIFICATIONS.
5. SIGN BLADES FOR STREET NAME SIGNS. EXTRUDED ALUMINUM BLADES SHALL BE ALUMINUM ALLOY CONFORMING TO 6063-T6 OR 5052-H38 (ASTM SPECIFICATION B221, LATEST ISSUE). BLADES SHALL HAVE AN ALODINE OR PHOSPHATE ETCHED FINISH. FIBERGLASS SIGN BLANKS MAY BE USED IN LIEU OF EXTRUDED ALUMINUM, PROVIDED THAT THE FIBERGLASS BLANKS MEET THE SIZE AND SHAPE REQUIREMENTS SHOWN ON THIS SHEET. BLADES SHALL HAVE SQUARE CORNERS AND NO HOLES.

   BLADES BEARING THE STREET NAMES SHALL BE FIRMLY ATTACHED TO THE MOUNTING BRACKETS USING ALLEN-TYPE SET SCREWS. THE BLADES SHALL BE ORIENTED PARALLEL TO THE STREET.
6. MOUNTING BRACKETS FOR STREET NAME SIGN. DIE-CAST ALUMINUM BRACKETS SHALL BE ALUMINUM ALLOY 360 HAVING A TENSILE STRENGTH OF 44,000 PSI. THE BRACKETS SHALL BE SMOOTHLY FINISHED FREE OF PITS, BURRS, AND FLAWS. EACH BRACKET SHALL BE TAPPED AND DRILLED FOR 5/16" ZINC-PLATED ALLEN-TYPE SET SCREWS HAVING SELF-LOCKING SAW-TOOTH ENDS.
7. FASTENERS. ALL STEEL FASTENERS FOR TRAFFIC CONTROL SIGNS SHALL BE GALVANIZED AND SHALL CONFORM TO THE REQUIREMENTS OF SUBSECTION 1614 OF THE STANDARD SPECIFICATIONS.
8. REFLECTIVE SHEETING. ALL SIGNS AND BARRICADES SHALL HAVE RETRO-REFLECTIVE FACES FACING TRAFFIC. REFLECTIVE SHEETING SHALL BE TYPE II – HIGH PERFORMANCE CLASS HA IN ACCORDANCE WITH SUBSECTION 2201 OF THE STANDARD SPECIFICATIONS.
9. PROCESS INK. ALL PROCESS INK SHALL CONFORM TO THE REQUIREMENTS OF SUBSECTION 2202 OF THE STANDARD SPECIFICATIONS.
10. DETAILS. REGULATORY AND WARNING SIGNS SHALL CONFORM TO THE DETAILS IN "STANDARD HIGHWAY SIGNS", FHWA, 1979.
11. DETAILS – STREET NAME SIGNS. THE REFLECTIVE SHEETING FOR THE 6 3/4" STANDARD SIZE STREET NAME SIGN IS TO BE HIGHWAY GREEN REVERSE SCREENED BACKGROUND WITH SILVER-WHITE #2 COPY WITH 4" UPPER CASE PRIMARY COPY AND SUFFIX COPY, SERIES "C". FACES TO TRIM TO A 6 3/4" WIDTH. (SEE DETAIL A.)

    SHOP DRAWINGS OF LAYOUTS FOR STREET NAME SIGNS SHALL BE SUBMITTED TO THE ENGINEER FOR APPROVAL PRIOR TO FABRICATION. THE FINISHED SIGNS AS SUPPLIED SHALL BE OF GOOD APPEARANCE, FREE FROM RAGGED EDGES, CRACKS, SCALES OR BLISTERS AND SHALL BE PACKED IN SUCH MANNER AS TO PREVENT DAMAGE OR DEFACEMENT DURING SHIPMENT OR STORAGE.
12. TRAFFIC CONTROL AND STREET NAME SIGNS. TRAFFIC CONTROL AND STREET NAME SIGNS SHALL BE MEASURED AND PAID FOR AT THE LUMP SUM PRICE FOR SIGNING. THE PAYMENT AS SET FORTH ABOVE SHALL BE CONSIDERED FULL COMPENSATION FOR ALL EXCAVATION, BACKFILLING, POSTS, ANCHORS, FASTENERS, MATERIALS, LABOR, TOOLS AND INCIDENTALS NECESSARY TO COMPLETE THIS WORK.

No.	Revision	By	Date

CITY OF VALLEY CENTER
SEDGWICK COUNTY, KANSAS

SIGNING DETAILS

Professional Engineering Consultants, P.A.
303 S. TOPEKA • WICHITA, KANSAS 67202
316-262-2691 • FAX 316-262-3003

Designed by | Job No. | Sht. of
Drawn by | Date

Saved 04-07-2008 6:52:06 AM by RCJ
Plot Scale 1:21.1493 04-07-2008 7:42:46 AM by RCJ
C:\1989\89355\DWG\2008 Updates\Figure 4-43

FIGURE II–3

GENERAL NOTES:

1. THIS SHEET IS INTENDED TO PROVIDE GUIDELINES AS TO WHAT TYPES OF BMP'S WILL BE INSTALLED DURING THE CONSTRUCTION PROCESS. CONTRACTORS ARE EXPECTED TO BID PROJECTS ACCORDINGLY.

2. BMP'S MUST BE MAINTAINED BY THE CONTRACTOR THROUGHOUT THE CONSTRUCTION PROCESS.

3. IF THE PROJECT WILL DISTURB 5 ACRES OR MORE, A FEDERAL/STATE NPDES STORMWATER PERMIT IS REQUIRED. A DETAILED STORMWATER POLLUTION PREVENTION PLAN, IS REQUIRED. THE BMP'S SHOWN ON THIS SHEET ARE CONSIDERED TO BE THE MINIMUM TO BE SHOWN IN THE POLLUTION PREVENTION PLAN.

4. FOR PROJECTS DISTURBING LESS THAN 5 ACRES, CONTRACTORS ARE ENCOURAGED TO PREPARE STORMWATER POLLUTION PREVENTION PLANS PRIOR TO CONSTRUCTION.

5. THE APPLICATION OF BMP'S SHOWN ON THIS SHEET IS FOR SITUATIONS NORMALLY ENCOUNTERED. FROM TIME TO TIME, SITUATIONS WILL ARISE THAT MAY REQUIRE A DIFFERENT BMP OTHER THAN THOSE SHOWN. BMP'S, OTHER THAN THOSE SHOWN, MAY BE UTILIZED AS LONG AS THEY ARE EFFECTIVE AND MAINTAINED.

NOTE TO DESIGNER
THIS SHEET SHALL BE INCLUDED IN PROJECT PLANS PRIMARILY AS A GUIDE SHOWING TYPES AND METHODS OF EROSION AND SEDIMENT CONTROL. EACH PROJECT PLAN SET SHALL ALSO INCLUDE INFORMATION ON SPECIFIC INSTALLATION LOCATIONS AND QUANTITIES FOR EACH ITEM.

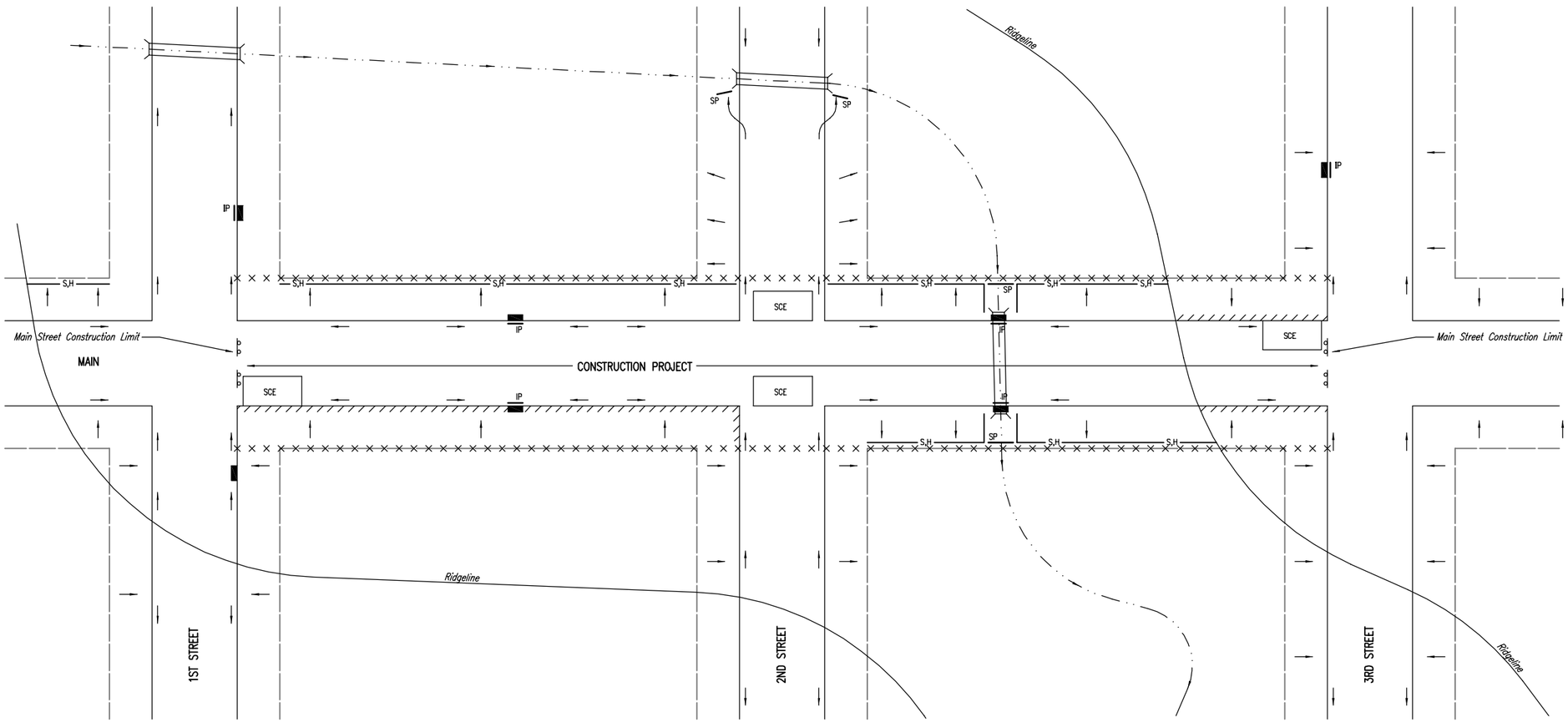

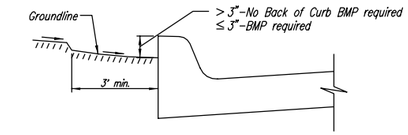

CURB BACKFILL DETAIL

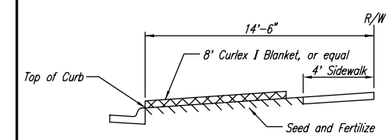

SECTION B–B

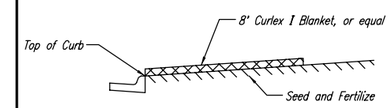

SECTION A–A

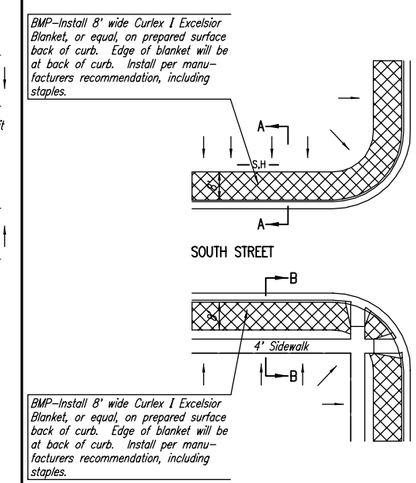

BACK OF CURB PROTECTION DETAIL

NOTES:

1. EXCELSIOR MAT TO BE INSTALLED WHEN SOD IS NOT SPECIFIED ON PROJECT.

2. EXCELSIOR BLANKET TO BE INSTALLED OVER SEED AND FERTILIZER.

3. AFTER INSTALLATION OF EXCELSIOR BLANKET, AT LOCATIONS WHERE CONCENTRATED FLOW CARRIES SEDIMENT OVER THE CURB AND INTO THE GUTTER, SUPPLEMENTAL BMP'S WILL BE INSTALLED BY THE CONTRACTOR AS NEEDED, TO FIX THE PROBLEM.

LEGEND

- R-O-W LIMITS
- DRAINAGE FLOW PATH
- × × × × × R/W LIMIT WITHIN CONSTRUCTION LIMIT
- STORM WATER INLETS
- IP — INLET PROTECTION
- S,H — SILT FENCE OR HAYBALE BMP
- SP — STREAM PROTECTION
- SCE — STABILIZED CONSTRUCTION ENTRANCE
- BACK OF CURB PROTECTION

NOTES:

1. GENERAL BMP GOAL IS TO KEEP ALL SEDIMENT CONFINED TO THE CONSTRUCTION SITE, AND OUT OF ALL UNDERGROUND PIPES, DITCHES, AND OTHER DRAINAGE FACILITIES.

2. THE POINT OF COMPLIANCE IS GENERALLY THE RIGHT-OF-WAY LINES WITHIN THE LIMITS OF CONSTRUCTION.

3. BMP'S WILL BE REQUIRED AT ALL POINTS ALONG THE PROJECT WHERE DISTURBED EARTH CAN DRAIN ONTO PRIVATE PROPERTY.

4. INLET PROTECTION DEVICES WILL BE REQUIRED WHEREVER WATER CAN DRAIN OFF THE PROJECT SITE INTO AN INLET, INCLUDING ANY SIDE STREET INLETS.

5. BMP'S SHALL BE INSTALLED AT CREEK CROSSINGS SO AS TO PREVENT SEDIMENT FROM ENTERING THEREIN.

6. STABILIZED CONSTRUCTION ENTRANCES SHALL BE PROVIDED, AS NEEDED, TO PREVENT MUD FROM TRACKING ONTO STREETS NOT UNDER CONSTRUCTION AND ON STREETS WITHIN THE PROJECT LIMITS IF TRAFFIC IS BEING MAINTAINED THROUGH THE PROJECT.

7. ANY MUD TRACKED ONTO STREETS MUST BE REMOVED AT THE END OF EACH WORK DAY.

8. THE CONTACTOR WILL BE REQUIRED TO PLACE BMP'S BACK OF CURB, WHENEVER WATER CAN DRAIN OVER CURB, TO KEEP ERODED SOIL OUT OF THE GUTTERLINES, IN ACCORDANCE WITH THE FOLLOWING:
   A. THE BMP REQUIRED WILL BE CURLEX I EXCELSIOR BLANKET, OR EQUAL. SAID BLANKET SHALL BE PLACED OVER THE APPROPRIATE SEED AND FERTILIZER, AS SPECIFIED IN THE PROJECT SPECIFICATIONS. (SEE BACK OF CURB PROTECTION DETAIL)
   B. THIS BMP SHALL BE INSTALLED IMMEDIATELY WHENEVER THE CURB IS BACKFILLED TO WITHIN 3" OF THE TOP OF CURB. (SEE CURB BACKFILL DETAIL) OTHER BMP'S MAY BE REQUIRED AT LOCATIONS WHERE CONCENTRATED FLOW CARRIES SEDIMENT OVER THE CURB.
   C. ADDITIONALLY, OTHER BMP'S (HAYBALES, SILT FENCE, ETC.) WILL BE INSTALLED AT LOCATIONS OF CONCENTRATED FLOW RESULTING IN SEDIMENT OVERRUNNING THE MAT.
   D. SHOULD THE PROJECT PLANS SPECIFY THAT THE RIGHT-OF-WAY IS TO BE SODDED, THE EXCELSIOR MAT WILL NOT BE REQUIRED SO LONG AS THE SOD IS PLACED WITHIN 48 HOURS AFTER CURB BACKFILL REACHES A HEIGHT OF 3" OR LESS FROM TOP OF CURB. (SEE DETAIL)

No.	Revision	By	Date
	JANUARY 2008		

CITY OF VALLEY CENTER
SEDGWICK COUNTY, KANSAS

SOIL EROSION BMPS
STREET IMPROVEMENT PROJECTS

Professional Engineering Consultants, P.A.
303 S. TOPEKA • WICHITA, KANSAS 67202
316-262-2691 • FAX 316-262-3003

Designed by	PEC	Job No.	Sheet of
Drawn by	PEC	Date JULY 2002	

Saved 04-07-2008 6:54:54 AM by RFJ
Plot Scale =1:21.526 04-07-2008 7:42:23 AM by RFJ
C:\1985\08355\00\X0808 Updates\Figure II-24a

FIGURE II–4a

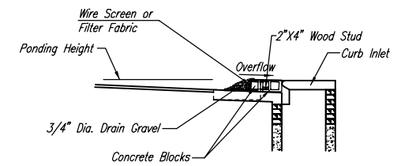

SECTION A–A

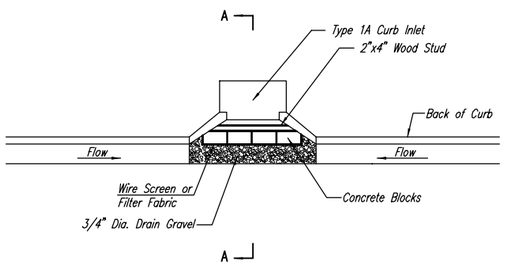

CURB INLET GRAVEL FILTERS
(INLET PROTECTION–RESIDENTIAL STREETS ONLY)

NOTE: Other types of curb inlet protection may be approved by the city so long as equal protection is provided.

A gravel inlet filter shall be installed at sump locations on residential streets. This type of protection is not to be used on arterial or collector streets at any time that it would pose an undue traffic hazard.

Instructions for Installing:

STEP 1: Place concrete blocks around the inlet as shown on drawing. Insert 2x4 board as shown.
STEP 2: Wrap 1/2" mesh wire screen around the concrete blocks.
STEP 3: Place 1" to 1–1/2" diameter rock around the blocks and wire screen. Be sure the rock extends down from the top of the concrete block.
STEP 4: To prevent damage to vehicles, signs warning drivers about the structures may be necessary. An alternative installation is the use of gravel bags supported by a 2"x4" board to prevent collapsing.

Use of rock with diameters smaller than 1" in the bag may result in clogging of pores and reduce the amount of water flowing into an inlet.

Maintenance:

All curb inlet gravel filters shall be inspected and repaired after each runoff event. Sediment deposits are to be removed once material is within 8 cm (3 inches) of the top of any block. Periodically, the gravel shall be raked to increase infiltration and filtering of runoff waters. Accumulated sediment is to be removed immediately from roads and streets.

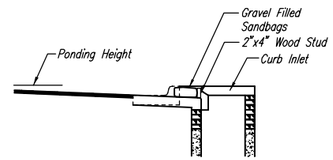

SECTION B–B

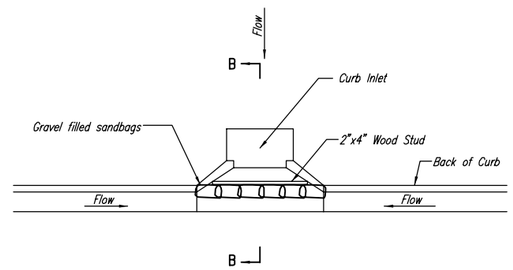

CURB INLET SANDBAG FILTERS
(INLET PROTECTION)

NOTE: Other types of curb inlet protection may be approved by the City so long as equal protection is provided.

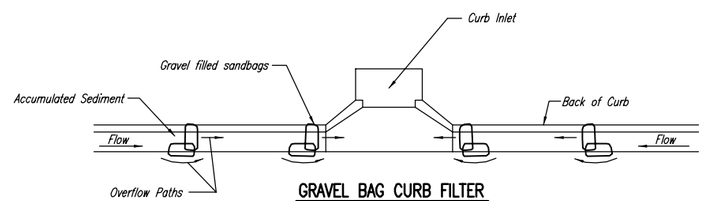

GRAVEL BAG CURB FILTER
(INLET PROTECTION)

NOTE: Place two or more sets of bags in a manner that results in maximum support. The flow line bag must be lower than top of curb.

CURB SEDIMENT TRAPS

When inlets are located on streets having a grade (i.e., sump conditions do not exist), installing gravel (or sand) bags in the gutter flow line to create small sediment traps can be considered. Gravel bags are recommended over sand bags to allow for drainage.

If the spacing between bags becomes too large, little sediment may be trapped. Spacing of bags should be completed using the table or graph that illustrates placement distances based upon street slope. When installed in the gutter, bag tops must be lower than the sidewalk.

Spacing:

Gravel bags are to be placed according to street grades using the following table or graph that appears below.

GRADE (%)	SPACING (FEET)
0.5	75
1.0	45
2.0	18
3.0	12
4.0	9
5.0	6

Maintenance:

Collected sediment shall be removed after every runoff event. Bags that are destroyed by vehicular traffic or through natural deterioration are to be immediately replaced.

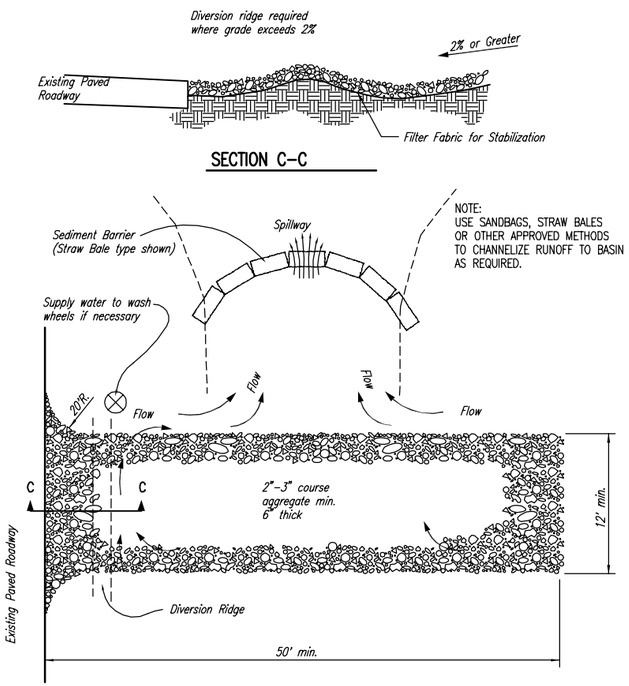

STABILIZED CONSTRUCTION ENTRANCE

NOTES:

1. THE ENTRANCE SHALL BE MAINTAINED IN A CONDITION THAT WILL PREVENT TRACKING OR FLOWING OF SEDIMENT ONTO PUBLIC RIGHTS–OF–WAY. THIS MAY REQUIRE TOP DRESSING, REPAIR AND/OR CLEANOUT OF ANY MEASURES USED TO TRAP SEDIMENT.
2. WHEN NECESSARY, WHEELS SHALL BE CLEANED PRIOR TO ENTRANCE ONTO PUBLIC RIGHT–OF–WAY.
3. WHEN WASHING IS REQUIRED, IT SHALL BE DONE ON AN AREA STABILIZED WITH CRUSHED STONE THAT DRAINS INTO AN APPROVED SEDIMENT TRAP OR SEDIMENT BASIN, AS SHOWN ABOVE.
4. DRIVE ENTRANCES ONTO RESIDENTIAL LOTS WILL NOT BE REQUIRED TO HAVE THE SEDIMENT BARRIER SHOWN, BUT WHEEL WASHING MAY BE REQUIRED IF STABILIZED ENTRANCE IS NOT SUFFICIENT TO KEEP MUD FROM BEING TRACKED ONTO ADJACENT STREET. ENTRANCE SHALL EXTEND FROM BACK OF CURB TO DWELLING.

NOTE TO DESIGNER
THIS SHEET SHALL BE INCLUDED IN PROJECT PLANS PRIMARILY AS A GUIDE SHOWING TYPES AND METHODS OF EROSION AND SEDIMENT CONTROL. EACH PROJECT PLAN SET SHALL ALSO INCLUDE INFORMATION ON SPECIFIC INSTALLATION LOCATIONS AND QUANTITIES FOR EACH ITEM.

No.	Revision	By	Date
	JANUARY 2008		

CITY OF VALLEY CENTER
SEDGWICK COUNTY, KANSAS

SOIL EROSION
BMP DETAILS

Professional Engineering Consultants, P.A.
303 S. TOPEKA • WICHITA, KANSAS 67202
316-262-2691 • FAX 316-262-3003

Designed by PEC | Job No. | Sheet of
Drawn by PEC | Date JULY 2002

Saved 04-07-2008 6:54:24 AM by REJ
Plot Scale 1:1 Plot Date 04-07-2008 7:49:01 AM by REJ
D:\1989\89355\DWG\2008 Updates\Figure II-4b

FIGURE II–4b

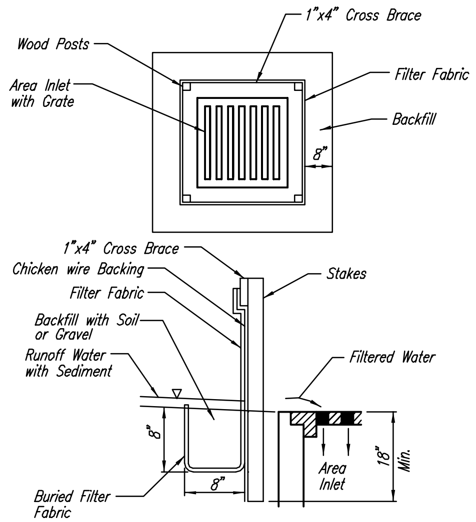

SILT FENCE BARRIERS FOR AREA INLETS
(INLET PROTECTION)

NOTE: Point A must be higher than Point B so that water flows over the silt fence fabric and not around it.

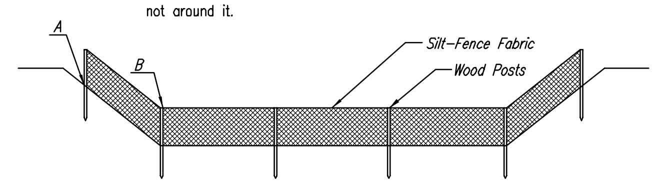

ELEVATION

SILT FENCE DITCH CHECKS
(STREAM PROTECTION)

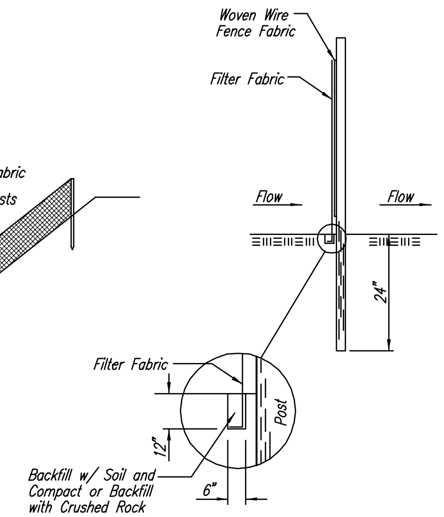

ANCHOR TRENCH DETAIL

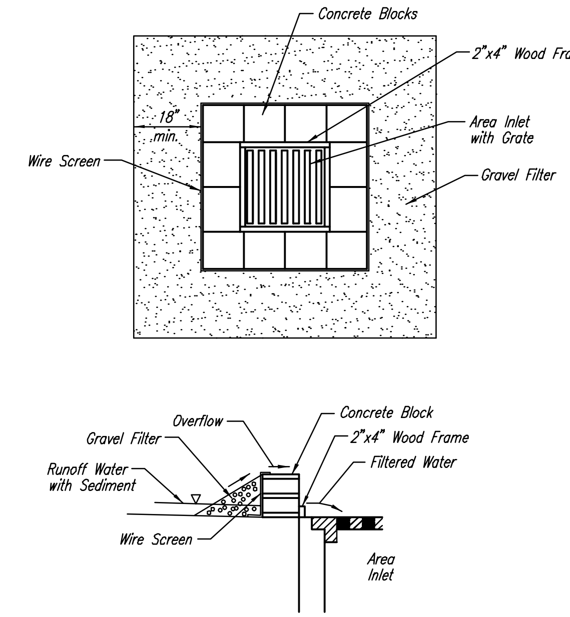

CONCRETE BLOCK FILTER FOR AREA DRAIN
(INLET PROTECTION)

NOTE TO DESIGNER
THIS SHEET SHALL BE INCLUDED IN PROJECT PLANS PRIMARILY AS A GUIDE SHOWING TYPES AND METHODS OF EROSION AND SEDIMENT CONTROL. EACH PROJECT PLAN SET SHALL ALSO INCLUDE INFORMATION ON SPECIFIC INSTALLATION LOCATIONS AND QUANTITIES FOR EACH ITEM.

Silt Fence Barriers for Area Inlets

Material Specification:

Silt fence fabric should conform to the AASHTO M288 96 silt fence specification.
The wire or polymeric mesh backing used to help support the silt fence fabric should conform to the AASHTO M288 96 silt fence specification.
The posts used to support the silt fence fabric should be a hardwood material with the following minimum dimensions: 2" square (nominal) by 4' long.
The material used to frame the tops of the posts should be 1" by 4" boards.
Silt fence fabric and support backing should be attached to the wooden posts and frame with staples, wire, zip ties, or nails.

Placement:

Place a silt fence drop inlet barrier in a location where it is unlikely to be overtopped.
Water should flow through silt fence, not over it. Silt fence barriers for area inlets often fail when repeatedly overtopped.
When used as a barrier for area inlets, silt fence fabric and posts must be supported at the top by a wooden frame.
When a silt fence barrier for area inlets is located near an inlet that has steep approach slopes, the storage capacity behind the barrier is drastically reduced. Timely removal of sediment must occur for a barrier to operate properly in this location.

Proper installation method:

Excavate a trench around the perimeter of the area inlet that is at least 8" deep by 8" wide.
Drive posts to a depth of at least 18" around the perimeter of the area inlet.
The distance between posts should be 4' or less. If the distance between two adjacent corner posts is more than 4', add another post(s) between them.
Connect the tops of all the posts with a wooden frame made of 1" by 4" boards. Use nails or screws for fastening.
Attach the wire or polymeric–mesh backing to the outside of the post/frame structure with staples, wire, zip ties, or nails.
Roll out a continuous length of silt fence fabric long enough to wrap around the perimeter of the area inlet. Add more length for overlapping the fabric joint. Place the edge of the fabric in the trench, starting at the outside edge of the trench. Line all three sides of the trench with the fabric. Backfill over the fabric in the trench with the excavated soil and compact. After filling the trench, approximately 24" to 36" of silt fence fabric should remain exposed.
Attach the silt fence to the outside of the post/frame structure with staples, wire, zip ties, or nails. The joint should be overlapped to the next post.

Note: When a silt fence barrier for area inlet is placed in a shallow median ditch, make sure that the top of the barrier is not higher than the paved road. In this configuration, water may spread onto the roadway causing a hazardous condition.

List of common placement/installation mistakes to avoid:

Water should flow through a silt fence barrier for area inlet–not over it. Place a silt fence barrier for area inlet in a location where it is unlikely to be overtopped. Silt fence barrier for area inlets often fail when repeatedly overtopped.
Do not place posts on the outside of the silt fence barrier for area inlet. In this configuration, the force of the water is not resisted by the posts, but only by the staples (wire, zip ties, nails, etc.). The silt fence will rip and fail.
Do not install silt fence barrier for area inlets without framing the top of the posts.
The corner posts around area inlets are stressed in two directions whereas a normal silt fence is only stressed in one direction. This added stress requires more support.

Inspection and Maintenance:

Silt fence barrier for area inlets should be inspected every 7 days and within 24 hours of a rainfall of 1/2" or more. The following is a list of questions that should be addressed during each inspection:

Does water flow under the silt fence?
Does the silt fence sag excessively?
Has the silt fence torn or become detached from the posts?
Does sediment need to be removed from behind the area inlet barrier?

Silt Fence Ditch Checks

Material Specification:

Silt fence fabric should conform to the AASHTO M288 96 silt fence specification.
The posts used to support the silt fence fabric should be a hardwood material with the following minimum dimensions: 2" square (nominal) by 4' long.
Silt fence fabric should be attached to the wooden posts with staples, wire, zip ties, or nails.

Placement:

Place silt fence in ditches where it is unlikely that it will be overtopped.
Water should flow through a silt fence ditch check, not over it. Silt fence ditch checks often fail when overtopped.
Silt fence ditch checks should be placed perpendicular to the flowline of the ditch.
The silt fence should extend far enough so that the ground level at the ends of the fence is higher than the top of the low point of the fence. This prevents water from flowing around the check.
Checks should not be placed in ditches where high flows are expected. Rock checks should be used instead.
Silt fence should be placed in ditches with slopes of 6% or less. For slopes steeper than 6%, rock checks should be used.

The following table provides check spacing for a given ditch grade:

Ditch Check Ditch grade (%)	Spacing Check Spacing (feet)
0.5	200
1.0	200
2.0	100
3.0	65
4.0	50
5.0	40
6.0	30

Proper installation method:

Excavate a trench perpendicular to the ditch flowline that is at least 12" deep by 6" wide.
Extend the trench in a straight line along the entire length of the proposed ditch check.
Place the soil on the upstream side of the trench for later use.
Roll out a continuous length of silt fence fabric on the downstream side of the trench.
Place the edge of the fabric in the trench starting at the top upstream edge of the trench.
Line two sides of the trench with the fabric as shown on detail. Backfill over the fabric in the trench with the excavated soil and compact. After filling the trench, approximately 24" to 36" of silt fence fabric should remain exposed.
Lay the exposed silt fence on the upstream side of the trench to clear an area for driving in the posts. Just downstream of the trench, drive posts into the ground to a depth of at least 24". Place posts no more than 4' apart.
Attach the silt fence to the anchored post with staples, wire, zip ties, or nails.

List of common placement/installation mistakes to avoid:

Water should flow through a silt fence ditch check–not over it. Place silt fence in ditches where it is unlikely that it will be overtopped. Silt fence installations quickly deteriorate when water overtops them.
Do not place silt fence posts on the upstream side of the silt fence fabric. In this configuration, the force of the water is not restricted by the posts, but only by the staples (wire, zip ties, nails, etc.). The silt fence will rip and fail.
Do not place a silt fence ditch check directly in front of a culvert outlet. It will not stand up to the concentrated flow.
Do not place silt fence ditch checks in ditches that will likely experience high flows. They will not stand up to concentrated flow.
Follow prescribed ditch check spacing guidelines. If spacing guidelines are exceeded, erosion will occur between the ditch checks.
Do not allow water to flow around the ditch check. Make sure that the ditch check is long enough so that the ground level at the ends of the fence is higher than the low point on the top of the fence.
Do not place silt fence ditch checks in channels with shallow soils underlain by rock. If the check is not anchored sufficiently, it will wash out.

Inspection and Maintenance:

Silt fence ditch checks should be inspected every 7 days and within 24 hours of a rainfall of 1/2" or more. The following is a list of questions that should be addressed during each inspection:

Does water flow around the ditch check?
Does water flow under the ditch check?
Does the silt fence sag excessively?
Has the silt fence torn or become detached from the posts?
Does sediment need to be removed from behind the ditch check?

Concrete Block Filter for Area Drain

Gravel barriers provide little filtering of large inflow waters. However, when installed correctly and maintained, they can effectively treat low runoff flows.

Placement of gravel filters around area drains must be completed in a manner that will not cause local flooding.

Gravel filters can be used if the immediate and adjacent area to the area drain consists of soil or pavement.

Only gravel filters are to be installed on top of the pavement.

Instructions for Installing:

STEP 1: Place concrete blocks around the grate. The blocks can be stacked one or two high and should be supported by a 2"x4" board.
STEP 2: Wrap 1/2" mesh wire screen around the concrete blocks.
STEP 3: Place 1" to 1–1/2" diameter rock around the blocks and wire screen. Be sure the rock extends down from the top of the concrete block.
STEP 4: To prevent damage to vehicles, signs warning drivers about the structures may be necessary.

An alternative method is use of gravel bags that are supported to prevent collapsing.

Use of rock having diameters smaller than 1" may result in clogging of pores and reduce the amount of water flowing into an inlet.

Maintenance:

All gravel filters installed around area drains should be inspected and repaired after each runoff event. Sediment should be removed when material is within 3" of the top of any block. Periodically, the gravel should be raked to increase infiltration and filtering of runoff waters. Accumulated sediment is to be removed immediately from roads and streets after every runoff event.

No.	Revision	By	Date
	JANUARY 2008		

CITY OF VALLEY CENTER
SEDGWICK COUNTY, KANSAS

SOIL EROSION BMP DETAILS

Professional Engineering Consultants, P.A.
303 S. TOPEKA • WICHITA, KANSAS 67202
316-262-2691 • FAX 316-262-3003

Designed by PEC	Job No.	Sheet of	
Drawn by PEC	Date JULY 2002		

FIGURE II–4c

Saved 04–07–2008 6:54:02 AM by RFJ
Plot Scale 1:2.1493 04–07–2008 7:41:32 AM by RFJ
Q:\1989\89355\001\2008 Updates\Figure II–04c

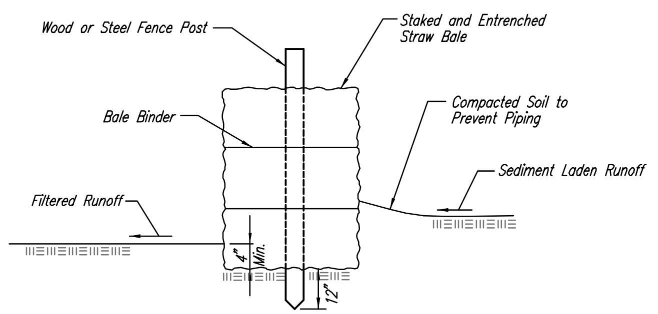

STRAW BALE BARRIERS

Material Specification:

Bale slope barriers may be constructed of wheat straw, oat straw, prairie hay, or bromegrass hay that is free of weeds declared noxious by the Kansas State Board of Agriculture.
The stakes used to anchor the bales should be a hardwood material with the following minimum dimensions: 2" square (nominal) by 4' long.

Placement:

A slope barrier should be used at the toe of a slope when a ditch does not exist. The slope barrier should be placed on nearly level ground 5' to 10' away from the toe of a slope. The barrier is placed away from the toe of the slope to provide adequate storage for settling out sediment.
When practicable, bale slope barriers should be placed along contours to avoid a concentration of flow.
Bale slope barriers can also be placed along right-of-way fence lines to keep sediment from crossing onto adjacent property. When placed in this manner, the slope barrier will not likely follow contours.

Proper installation method:

Excavate a trench the length of the planned slope barrier that is 4" deep and a bale's width wide. Make sure that the trench is excavated along a single contour. When practicable, slope barriers should be placed along contours to avoid a concentration of flow. Place the soil on the upslope side of the trench for later use.
Place the bales in the trench, making sure that they are butted tightly. Two stakes should be driven through each bale along the centerline of the ditch check, approximately 6" to 8" in from the bale ends. Stakes should be driven at least 12" into the ground.
Once all the bales have been installed and anchored, place the excavated soil against the upslope side of the check and compact it. The compacted soil should be no more than 3" to 4" deep.

List of common placement/installation mistakes to avoid:

When practical, do not place bale slope barriers across contours. Slope barriers should be placed along contours to avoid a concentration of flow. Concentrated flow over a slope barrier creates a scour hole on the downslope side of the barrier. The scour hole eventually undermines the bales and the barrier fails.
Do not place bale slope barriers in areas with shallow soils underlain by rock. If the barrier is not anchored sufficiently, it will wash out.
Bale slope barriers must be dug into the ground. Bales at ground level do not work because they allow water to flow under the barrier.

Inspection and Maintenance:

Bale slope barriers should be inspected every 7 days and within 24 hours of a rainfall of 1/2" or more. The following is a list of questions that should be addressed during each inspection:

Are there any points along the slope barrier where water is concentrating?
Does water flow under the slope barrier?
Does water flow through spaces between abutting bales?
Are any bales dislodged?
Are bales decomposing due to age and/or water damage?
Does sediment need to be removed from behind the slope barrier?

NOTE TO DESIGNER
THIS SHEET SHALL BE INCLUDED IN PROJECT PLANS PRIMARILY AS A GUIDE SHOWING TYPES AND METHODS OF EROSION AND SEDIMENT CONTROL. EACH PROJECT PLAN SET SHALL ALSO INCLUDE INFORMATION ON SPECIFIC INSTALLATION LOCATIONS AND QUANTITIES FOR EACH ITEM.

NOTE: Point A must be higher than Point B so that water flows over the bales and not around them.

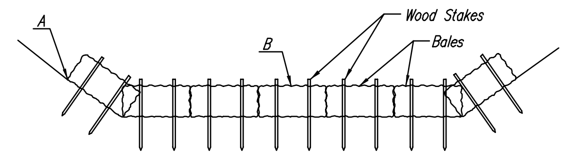

STRAW BALE DITCH CHECKS

Material Specification:

Bale ditch checks may be constructed of wheat straw, oat straw, prairie hay, or bromegrass hay that is free of weeds declared noxious by the Kansas State Board of Agriculture.
The stakes used to anchor the bales should be a hardwood material with the following minimum dimensions: 2" square (nominal) by 4' long.
Optional: The downstream scour apron should be constructed of a double-netted straw erosion-control blanket at least 6' wide.
Optional: The metal landscape staples used to anchor the erosion-control blanket should be at least 8" long.

Placement:

Bale ditch checks should be placed perpendicular to the flowline of the ditch.
The ditch check should extend far enough so that the ground level at the ends of the check is higher than the top of the lowest center bale. This prevents water from flowing around the check.
Checks should not be placed in ditches where high flows are expected. Rock checks should be used instead.
Bales should be placed in ditches with slopes of 6% or less. For slopes steeper than 6%, rock checks should be used.
The following table provides check spacing for a given ditch grade:

Ditch Check Spacing

Ditch grade (%)	Check Spacing (feet)
0.5	200
1.0	200
2.0	100
3.0	65
4.0	50
5.0	40
6.0	30

Proper installation method:

Excavate a trench perpendicular to the ditch flowline that is 4" deep and a bale's width wide. Extend the trench in a straight line along the entire length of the proposed ditch check. Place the soil on the upstream side of the trench-it will be used later.
Optional: On the downstream side of the trench, roll out a length of erosion-control blanket (scour apron) equal to the length of the trench. Place the upstream edge of the erosion-control blanket along the bottom upstream edge of the trench. The erosion control blanket should be anchored in the trench with one row of 8" landscape staples placed on 18" centers. The remainder of the erosion-control blanket (the portion that is not lying in the trench) will serve as the downstream scour apron. This section of the blanket should be anchored to the ground with 8" landscape staples placed around the perimeter of the blanket on 18" centers. The remainder of the blanket should be anchored using two evenly spaced rows of 8" landscape staples on 18" centers placed perpendicular to the flowline of the ditch.
Place the bales in the trench, making sure that they are butted tightly. Two stakes should be driven through each bale along the centerline of the ditch check, approximately 6" to 8" in from the bale ends. Stakes should be driven at least 12" into the ground.
Once all the bales have been installed and anchored, place the excavated soil against the upstream side of the check and compact it. The compacted soil should be no more than 3" to 4" deep and extend upstream no more than 24".

List of common placement/installation mistakes to avoid:

Do not place a bale ditch check directly in front of a culvert outlet. It will not stand up to the concentrated flow.
Do not place bale ditch checks in ditches that will likely experience high flows. They will not stand up to concentrated flow.
Follow prescribed ditch-check spacing guidelines. If spacing guidelines are exceeded, erosion will occur between the ditch checks.
Do not allow water to flow around the ditch check. Make sure that the ditch check is long enough so that the ground level at the ends of the check is higher than the top of the lowest center bale.
Do not place bale ditch checks in channels with shallow soils underlain by rock. If the check is not anchored sufficiently, it will wash out.
Bale ditch checks must be dug into the ground. Bales at ground level do not work because they allow water to flow under the check.

Inspection and Maintenance:

Bale ditch checks should be inspected every 7 days and within 24 hours of a rainfall of 1/2" or more. The following is a list of questions that should be addressed during each inspection:

Does water flow around the ditch check?
Does water flow under the ditch check?
Does water flow through spaces between abutting bales?
Are any bales and/or scour aprons (optional) dislodged?
Are bales decomposing due to age and/or water damage?
Does sediment need to be removed from behind the ditch check?

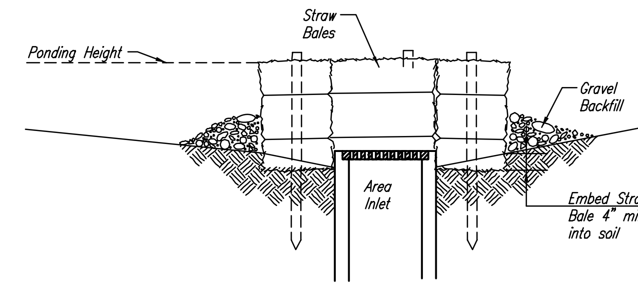

SECTION A-A

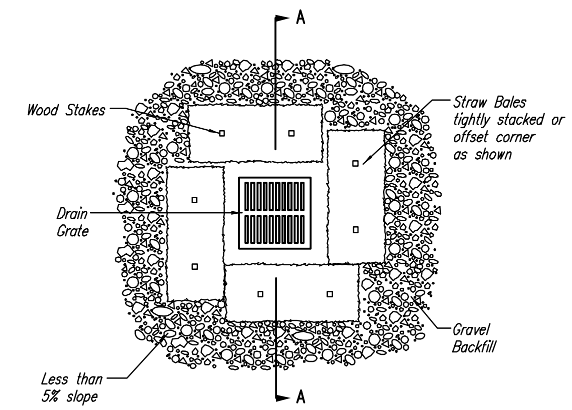

STRAW BALE BARRIERS FOR AREA INLETS

(INLET PROTECTION)

Material Specification:

Bale area inlet barriers should be constructed of wheat straw, oat straw, prairie hay, or bromegrass hay that is free of weeds declared noxious by the Kansas State Board of Agriculture.
The stakes used to anchor the bales should be a hardwood material with the following minimum dimensions: 2" square (nominal) by 4' long.

Placement:

Bale area inlet barriers should be placed directly around the perimeter of a drop inlet.
When a bale area inlet barrier is located near an inlet that has steep approach slopes, the storage capacity behind the barrier is drastically reduced. Timely removal of sediment must occur for a barrier to operate properly in this location.

Proper Installation Method:

Excavate a trench around the perimeter of the area inlet that is at least 4" deep by a bale's width wide.
Place the bales in the trench, making sure that they are butted tightly. Some bales may need to be shortened to fit into the trench around the area inlet. Two stakes should be driven through each bale, approximately 6" to 8" in from the bale ends.
Stakes should be driven at least 12" into the ground.
Once all the bales have been installed and anchored, place the excavated soil against the receiving side of the barrier and compact it. The compacted soil should be no more than 3" to 4" deep.
Note: When a bale area inlet barrier is placed in a shallow median ditch, make sure that the top of the barrier is not higher than the paved road. In this configuration, water may spread onto the roadway causing a hazardous condition.

List of common placement installation mistakes to avoid:

Bales should be placed directly against the perimeter of the area inlet. This allows overtopping water to flow directly into the inlet instead of onto nearby soil causing scour.
Bale area inlet barriers must be dug into the ground. Bales at ground level do not work because they allow water to flow under the barrier.

Inspection and Maintenance:

Bale area inlet barriers should be inspected every 7 days and within 24 hours of a rainfall 1/2" or more. The following is a list of questions that should be addressed during each inspection:

Does water flow under the area inlet barrier?
Does water flow through spaces between abutting bales?
Are any bales dislodged?
Are bales decomposing due to age and/or water damage?
Does sediment need to be removed from behind the area inlet barrier?

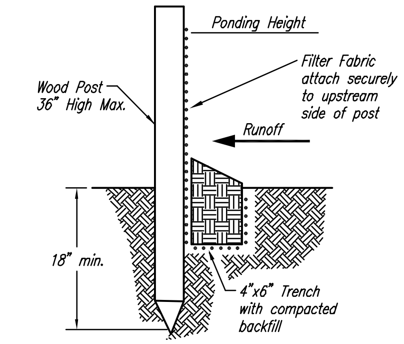

SILT FENCE BARRIERS

SILT FENCE BARRIERS

Material Specification:

Silt fence fabric should conform to the AASHTO M288 96 silt fence specification.
The posts used to support the silt fence fabric should be a hardwood material with the following minimum dimensions: 2" square (nominal) by 4' long.
Silt fence fabric should be attached to the wooden posts with staples, wire, zip ties, or nails.

Placement:

A slope barrier should be used at the toe of a slope when a ditch does not exist. The slope barrier should be placed on nearly level ground 5' to 10' away from the toe of a slope. The barrier is placed away from the toe of the slope to provide adequate storage for settling out sediment.
When practicable, silt fence slope barriers should be placed along contours to avoid a concentration of flow.
Silt fence slope barriers can also be placed along right-of-way fence lines to keep sediment from crossing onto adjacent property. When placed in this manner, the slope barrier will not likely follow contours.

Proper installation method:

Excavate a trench the length of the planned slope barrier that is 6" deep by 4" wide. Make sure that the trench is excavated along a single contour. When practicable, slope barriers should be placed along contours to avoid a concentration of flow. Place the soil on the upslope side of the trench for later use.
Roll out a continuous length of silt fence fabric on the downslope side of the trench.
Place the edge of the fabric in the trench starting at the top upslope edge. Line all three sides of the trench with the fabric. Backfill over the fabric in the trench with the excavated soil and compact. After filling the trench, approximately 24" to 36" of silt-fence fabric should remain exposed.
Lay the exposed silt fence upslope of the trench to clear an area for driving in the posts.
Just downslope of the trench, drive posts into the ground to a depth of at least 18".
Place posts no more than 4' apart.
Attach the silt fence to the anchored post with staples, wire, zip ties, or nails.

List of common placement/installation mistakes to avoid:

When practicable, do not place silt fence slope barriers across contours. Slope barriers should be placed along contours to avoid a concentration of flow. When the flow concentrates, it overtops the barrier and the silt fence slope barrier quickly deteriorates.
Do not place silt-fence posts on the upslope side of the silt fence fabric. In this configuration, the force of the water is not restricted by the posts, but only by the staples (wire, zip ties, nails, etc.). The silt fence will rip and fail.
Do not place silt fence slope barriers in areas with shallow soils underlain by rock. If the barrier is not sufficiently anchored, it will wash out.
Silt fence slope barriers must be dug into the ground-silt fence at ground level does not work because water will flow underneath.

Inspection and Maintenance:

Silt fence slope barriers should be inspected every 7 days and within 24 hours of a rainfall of 1/2" or more. The following is a list of questions that should be addressed during each inspection:

Are there any points along the slope barrier where water is concentrating?
Does water flow under the slope barrier?
Do the silt fences sag excessively?
Has the silt fence torn or become detached from the posts?
Does sediment need to be removed from behind the slope barrier?

	JANUARY 2008		
No.	Revision	By	Date

CITY OF VALLEY CENTER
SEDGWICK COUNTY, KANSAS

SOIL EROSION
BMP DETAILS

Professional Engineering Consultants, P.A.
303 S. TOPEKA • WICHITA, KANSAS 67202
316-262-2691 • FAX 316-262-3003

Designed by	PEC	Job No.	Sheet of
Drawn by	PEC	Date JULY 2002	

FIGURE II-4d

Saved 04-07-2008 6:55:20 AM by RFJ
Plot Scale 1:2.1493 04-07-2008 7:41:06 AM
Q:\1989\89355\001\2008 Updates\Figure II-04d
by RFJ

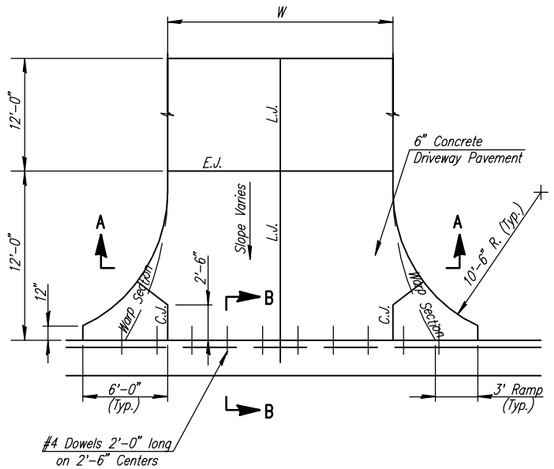

PLAN

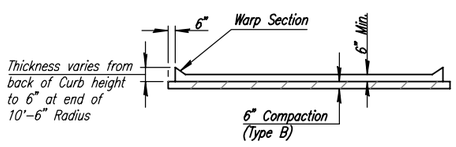

SECTION A–A

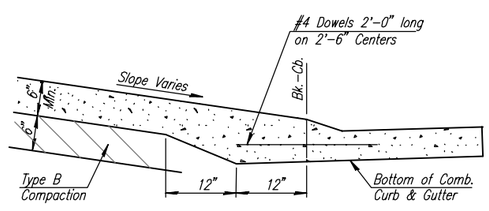

SECTION B–B

GENERAL NOTES

ONE LONGITUDINAL JOINT SHALL BE CONSTRUCTED ALONG THE CENTERLINE OF DRIVES HAVING A "W" DIMENSION OF 20' OR LESS. TWO LONGITUDINAL JOINTS SHALL BE CONSTRUCTED WITH EQUAL SPACINGS OF 10' OR LESS FOR DRIVES WITH A "W" DIMENSION GREATER THAN 20'.

ADDITIONAL THICKNESS OF DRIVE PAVEMENT AS INDICATED IN SECTION B–B SHALL NOT BE PAID FOR DIRECTLY, BUT SHALL BE INCLUDED IN THE UNIT PRICE BID FOR DRIVEWAY PAVEMENT.

EXPANSION JOINTS ONE–HALF–INCH WIDE SHALL BE INSTALLED WHEN CONCRETE DRIVE ABUTS AN EXISTING CONCRETE DRIVE.

WHERE DRIVE APPROACHES ARE INSTALLED, THEY SHALL BE 6" IN THICKNESS AND SHALL BE UNREINFORCED UNLESS OTHERWISE REQUESTED BY THE PROPERTY OWNER AS DESCRIBED BELOW. PRIOR TO BEGINNING CONSTRUCTION, THE CONTRACTOR SHALL OBTAIN A DRIVEWAY REQUEST FORM FROM ALL PROPERTY OWNERS CONFIRMING THE EXACT LOCATION AND WIDTH OF DRIVE AND GIVING THE CONTRACTOR PERMISSION TO PERFORM DRIVEWAY RELATED WORK ON PRIVATE PROPERTY IF NECESSARY.

FOR BIDDING PURPOSES, ALL DRIVEWAYS SHALL BE 6" IN THICKNESS AND SHALL BE WITHOUT REINFORCEMENT. HOWEVER, DRIVEWAYS MAY BE CONSTRUCTED THICKER THAN 6" AND/OR REINFORCED WITH 6" x 6" W6–W6 WELDED WIRE FABRIC WHEN REQUESTED IN WRITING BY THE OWNER ON THE DRIVEWAY REQUEST FORM. ALL COSTS ASSOCIATED WITH THE ADDITIONAL THICKNESS AND/OR REINFORCEMENT SHALL BE THE RESPONSIBILITY OF THE PROPERTY OWNER.

DRIVE APPROACHES SHALL BE CONSTRUCTED TO THE STREET RIGHT–OF–WAY LINE AT A GRADE WHICH WILL ALLOW SMOOTH HOOKUP TO THE EXISTING DRIVEWAY. AT THE WRITTEN REQUEST OF THE PROPERTY OWNER, FURTHER GRADING, PAVEMENT REMOVAL, PAVING, ETC. ON PRIVATE PROPERTY MAY BE PERFORMED TO CONNECT TO EXISTING PAVEMENT, TO PROVIDE A FLATTER DRIVEWAY GRADE, OR TO OTHERWISE IMPROVE THE DRIVE. ALL ADDITIONAL COSTS FOR SUCH WORK SHALL BE THE RESPONSIBILITY OF THE PROPERTY OWNER AND SHALL NOT BE A PART OF THIS PROJECT.

DRIVEWAY WIDTH DENOTED AS "W" ON THE DETAIL DRAWINGS SHALL BE A MINIMUM OF 12' AND A MAXIMUM OF 50% OF PLATTED LOT WIDTH.

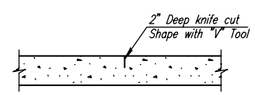

CONTRACTION JOINT (CJ)
OR LONGITUDINAL JOINT (LJ)

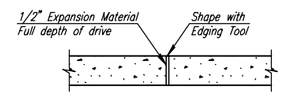

EXPANSION JOINT (EJ)

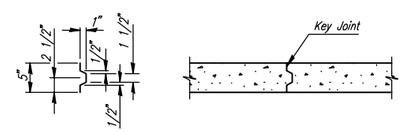

ALT. LONGITUDINAL CONSTRUCTION JOINT

JOINT DETAILS
FOR CONCRETE DRIVES

CURB STAMPING LOCATIONS

STREET	STATION	SIDE	DESCRIPTION
------	-----	----	-------

For Information Only–Approximate Locations

NOTE: For future reference in locating water valves, water meters, and sanitary sewer cleanouts, the contractor will be required to place a permanent marking on the curb adjacent to each item. (Valves, meters and cleanouts to be flagged by their respective contractors.) The marking shall consist of a letter at least 4 inches in height stamped into the curb face immediately upon placement of the curb and gutter. The letter "M" shall be used to indicate water meter locations, the letter "V" shall be used for water valves, and the letter "S" shall be used for sanitary sewer cleanout. See table for approximate stamping locations. This work shall be subsidiary to Combined Curb and Gutter.

CONCRETE DRIVE DETAILS

No.	Revision	By	Date
	JANUARY 2008		

CITY OF VALLEY CENTER
SEDGWICK COUNTY, KANSAS

CONCRETE DRIVE DETAILS

Professional Engineering Consultants, P.A.
303 S. TOPEKA • WICHITA, KANSAS 67202
316-262-2691 • FAX 316-262-3003

Designed by PEC | Job No. | Sheet of
Drawn by PEC | Date JULY 2002

Saved 04-07-2008 7:35:32 AM by RFJ
Plot Scale 1:1.4925 04-07-2008 7:40:33 AM by JEJ
C:\1994\94355\001\02108 Updated Figure II-05

SECTION III. DRAINAGE AND STORM SEWER POLICY FOR DESIGN CRITERIA AND DOCUMENTATION

GENERAL

Every urban area has four separate and distinct drainage systems: (1) is the major system which frequently consists of open channels and may include storage areas in the channels or in ponds- (2) is the initial system which usually consists of a closed conduit with area inlets and curb inlets- (3) is paved streets which are used to convey runoff from individual lots to the initial system; and (4) is proper individual lot grading to convey runoff from the lot to the paved street and/or area inlets. Obviously the primary function of streets is to convey traffic and drainage must be considered secondary in varying degrees to traffic needs.

The designer must address all 4 systems.

Two manuals have been selected for adoption and are to use for design. They are titled: (1) **"Design of Urban Highway Drainage - The State of the Art" (Manual No. 1)** prepared by Reitz and Jens, Inc., Consulting Engineers, under the sponsorship of the United States Department of Transportation, reprinted in April 1980; and (2) **"Drainage of Highway Pavements" (Manual No. 2)** prepared by Tye Engineering, Inc. under the sponsorship of the United States Department of Transportation, dated March, 1984.

These manuals are available from the National Technical Information Service, Springfield, Virginia 22101.

The following statements are to be added to Manual No. 1:

A. List of Symbols Comments and Modifications

1. Symbols used in drainage calculations and tabulations shall conform to the list of symbols shown on pages III, IV, V, VI, VII and VIII of the manual. Symbols used in calculations and tabulations which are not shown on this list shall be clearly identified in the calculations or tabulations. All drainage calculations shall be performed using English units of measurement.

B. Chapter 1 Comments and Modifications - "General Principles of Stormwater Design

1. Narrative in Chapter I shall be considered as background information and not necessarily adopted as City policy. The City does not presently require treatment of storm water sewer discharges. Consultants are encouraged, however, to incorporate measures in all projects which will reduce pollution especially from soil erosion.

General drainage criteria in the City shall be as identified in the following tables for the initial storm:

TABLE I
INITIAL DESIGN STORM FREQUENCY

Land Use	Initial Design Storm Return Period
1. Residential and Public Park Areas	2 years
2. General Commercial Areas	5 years
3. Public Building Areas	5 years
4. Industrial Areas	5 years
5. High Value Downtown Business Areas	5 years

TABLE II
ALLOWABLE PAVEMENT ENCROACHMENT FOR INITIAL DESIGN STORM

Street Classification	Allowed Encroachment
1. Local	No curb overtopping. Flow may spread across crown.
2. Collector	One 8' lane width must be free of water.
3. Arterial	One 8' through lane width in each direction must be free of water.

An additional requirement to the initial system criteria is that the runoff from the 100-year frequency major storm for time of concentrations identical to the initial system design must be retained within public rights-of-way in all cases. This 100-year frequency major storm requirement must be evaluated for projects in existing developed areas and when identified as prohibitive because of estimated costs, the consultant shall provide criteria recommendations to the City for such projects which will provide a reasonable cost/benefit ratio for the project.

C. <u>Chapter 2 Comments and Modifications - "Precipitation"</u>

1. Precipitation intensity for the various durations and frequencies shall be as shown in the table attached to this document and identified as "Attachment A". When intensities are required for durations not shown in the table in the range between 2-hour and 24-hour durations, such intensities shall be computed as straight-line interpolations.

D. Chapter 3 Comments and Modifications - "Runoff'

Logic and documentation for the following items shall be provided in writing when final drainage computations are submitted to the City for approval.

1. Interception by vegetation is not a required consideration.

2. Infiltration loss on pervious surfaces shall be considered in those cases where such losses become significant. Infiltration loss for pervious surfaces for use with the S.C. S. dimensionless unit hydrograph method shall conform to the table attached to this document and identified as "Attachment B". Infiltration losses are included in the coefficients of runoff provided for use with the modified rational method.

3 . Depression storage loss shall be considered in those cases where such losses become significant. Depression storage loss for pervious and impervious surfaces for use with the S.C. S. dimensionless unit hydrograph method shall conform to the table attached to this document and identified as "Attachment C". Depression storage losses are included in the coefficients of runoff provided for use with the modified rational method.

4. Reduction for gutter storage shall be taken into account where such storage is a significant factor. Use of this reduction will be by specific approval from the City on a case-by-case basis.

5. Reduction of peak flow rate due to conduit storage will not usually be a consideration. Use of this reduction may be a significant factor where large conduits are required. Use of this reduction will be by specific approval from the City on a case-by-case basis.

6. The rational method with required modifications shall be used to compute design runoff for areas of 320 acres or less tributary to the design point being considered. Design runoff from areas between 320 acres and 750 acres shall be computed using both the rational method and the S.C. S. dimensionless unit hydrograph method and whichever method produces the larger peak runoff shall be used to design the system for the area tributary to the design point being considered.

7. Coefficients of runoff used in the rational method shall be as indicated in the table attached to this document and identified as "Attachment D" for the storm frequencies shown. Development of composite runoff coefficients for drainage areas and/or sub-areas shall be documented and correlated with such areas shown on a drainage area map.

8. The minimum inlet time or time of concentration used shall be 15 minutes. Inlet time or time of concentration shall be computed using the procedures identified as follows:

   a. Travel time in street gutter sections shall be determined using the procedures identified in Section 4.1.3. of Manual No. 2.

   b. Overland sheet flow time shall be determined using the kinematics wave theory as presented in Section 4.1.3. of Manual No. 2 except that when the product of the rainfall intensity and the length of flow as determined by this method is less than 500, the kinematic wave theory is not valid for this situation and in these cases, the overland flow time shall be determined as identified in (c.) below.

   c. Overland sheet flow time shall be computed using average flow velocities as determined from the attached table identified as "Attachment E" and the estimated flow lengths involved when the kinematic wave theory is determined to be invalid as identified in (b.) above. Velocities for slopes not shown in "Attachment E" shall be computed as a straight-line interpolation and/or extrapolation within the ranges shown.

   d. When the inlet time or time of concentration computed by the above procedures is less than 15 minutes the minimum of 15 minutes shall be used as the inlet time or time of concentration.

9. Composite infiltration rates for use with the S.C. S. dimensionless unit hydrograph method shall be based on procedures identified in Figure 3-9 of Section 3.3.5.2. of Manual No. 1. See Exhibit Nos. I and 2 showing general soil types in the area.

10. Format, computation, and documentation required for the S.C. S. dimensionless unit hydrograph shall be as shown in the example provided in Manual No. I beginning with Section 3.3.5.9. Documentation to be included in submittal to City for approval shall include all computations in the order identified in the example, a tabulation of unit hydrograph coordinates, a plot of unit hydrograph, a tabulation of effective rainfall, a tabulation of storm hydrograph coordinates for the drainage area, a plot of the storm hydrograph for the drainage area, a map of the drainage area, and computations showing determination of the percentage of impervious surface. Locations of soil types involved shall be shown on the map of drainage area.

E. Chapter 4 Comments and Modifications - "Storage"

1. The Division of Water Resources of the Kansas State Board of Agriculture has adopted specific requirements governing design of dams for detention storage. Such requirements are contained in documents identified as Engineering Guide - I and Engineering Guide - 2. Requirements identified in the latest revision of these two documents shall be adhered to when designing facilities addressed by the documents.

   Criteria, standards, and documentation identified in Chapter 4 of Manual No. I shall be adhered to in all cases where such criteria and standards do not conflict with the Division of Water Resources requirements contained in their engineering guides.

   Documentation as indicated in the example problems in said Chapter 4 shall be submitted in writing when final drainage computations are submitted to the City for approval.

F. Chapter 5 Comments and Modifications - "Roadway Drainage"

1. Criteria standards and documentation identified in Manual No. 2 revises and expands upon such items as contained in Chapter 5 of Manual No. 1. Such criteria, standards, and documentation contained in Manual No. 2 shall supersede, revise, and expand like items as contained in Chapter 5 of Manual No. 1, otherwise criteria, standards, and documentation identified in Chapter 5 of Manual No. I shall be in effect.

2. Topics contained in Section 4.0., 4.1., 4.1.1., 4.1.2., 4.1.3., 4.1.4., and 4.2. of Manual No. 2 have been discussed previously in this policy statement; therefore, requirements for topics contained in these sections will be as previously identified.

3. Symbols used in computations related to highway or street pavement drainage shall conform to the list of symbols contained on pages 10, 11, and 12 of Manual No. 2. Such computations shall use English units of measure.

4. Curb opening inlets shall be approved and adopted City standards. Inlets proposed for construction on grades in excess of 3.0% shall include curb openings and gutter grate openings. Adopted standards for such curb opening inlets with gutter grates will be developed with projects as needed. Gutter grates shall be of the curved vane type and incorporate features of existing standard curb opening inlets functioning on the sweeper principle. Inlets with grates must be located to minimize hazards to pedestrians and bicycles. Curved vane gutter grates shall be of the type indicated on page 42 of Manual No. 2.

5. Design and evaluation of City Standard Type I inlets proposed for construction on grade operating as a weir shall follow procedures identified in solution (2) of Example 11 on pages 63 and 64 of Manual No. 2. Design and evaluation of City Standard Type IA inlets proposed for construction on grade operating as a weir shall follow the same procedures as identified above for Type I inlets except the formula used for determining inlet efficiency in Chart 10 shall be revised to $(L + 1) - L_T$ to compensate for increased efficiency of inlets constructed in the set back location.

6. Design and evaluation of City Standard Type I inlets proposed for construction in sumps operating as a weir shall follow procedures identified by Chart 12 on page 77 of Manual No. 2. Design and evaluation of City Standard Type I inlets proposed for construction in sumps operating as an orifice shall follow procedures identified by Chart 14 on page 79 of Manual No. 2. Water depth (d_o) used with Chart 14 shall be based on the formula identified with drawing (b) of Figure 21 on page 75 of Manual No. 2 where d_i in such formula is the distance from the point shown in the drawing for where the angle O is measured to the water surface elevation. Design and evaluation of City Standard Type IA inlets proposed for construction in sumps operating as a weir shall follow procedures identified by Chart 12 on page 77 of Manual No. 2 except the formula used for determining P shall be revised to $P = L + 1 + 1.8\ W$ to compensate for increased efficiency of inlets constructed in the set back location. Design and evaluation of City Standard Type IA inlets proposed for construction in sumps operating as an orifice shall follow procedures identified by Chart 12 on page 77 of Manual No. 2.

7. Design and evaluation of City Standard Type I and Type IA inlets proposed for construction on grade operating as orifices shall follow procedures identified for design and evaluation of such inlets in sumps operating as orifices.

8. Format, computation, and documentation required for design of storm sewer systems shall be as shown in the example provided in Manual No. 1 beginning with Section 5.11. Documentation to be included in submittal to City Engineer, or his authorized representative, for approval shall include all computations in the order identified in the example, a tabulation of design computations as identified in Table 5-7 in Manual No. 1, a plan of the system as identified in Figure 5-38(a) in Manual No. 1, a profile of the system as identified in Figure 5-3 8(b) in Manual No. 1, and tabulations of inlet design computations as indicated in Exhibit Nos. 4 and 5. The numbering of the various points for design consideration shall follow procedures indicated in Figure 5-39 in Manual No. 1.

G. <u>Supplementary Design Information and Criteria</u>

Section I: General Criteria for Open Channels Ditches and Related Appurtenances

1. Introduction

Open channels for use in the major drainage system have significant advantage in regard to cost, capacity, multiple use for recreational and aesthetic purposes and potential for detention storage. Disadvantages include right-of-way needs and maintenance costs. Careful planning and design are needed to minimize the disadvantages and to increase the benefits.

2. Geometric Features

a. Where possible, a primary and an auxiliary channel shall be employed. Purpose of the primary channel is to carry the design flood discharge. Purpose of the auxiliary channel is to contain daily flow, minimize the portion of channel bottom which is normally wet and reduce bank erosion caused by the natural tendency of stream flow to meander from bank to bank.

b. Side slopes of the primary channel shall be no steeper than 4 horizontal to I vertical.

c. Minimum bottom width of either primary or auxiliary channel shall be 4 feet.

d. Side slopes of the auxiliary channel shall be 0.5 horizontal to I vertical.

e. Maximum width of the auxiliary channel shall be 10 feet.

f. Maximum depth of the auxiliary channel shall be 2 feet.

g. The auxiliary channel shall be centered in the primary channel wherever sufficient bottom width is available.

h. Where primary channel bottom width dictates that the auxiliary channel be set to one side of the primary channel, the near side overbank distance shall be a minimum of 2 feet; the far side overbank distance shall be a minimum of 10 feet. The cross-slope on the overbank channel shall be 2%.

i. Where primary channel width will not accommodate an auxiliary channel the primary channel shall feature a "V" bottom using 2% cross slope.

j. Auxiliary or "V" geometric features may be disregarded in hydraulic computations, such as computations for water surface profiles.

3. Manning's formula constants for roughness factor (n).

a. For grass-lined channel - "n" = 0.030.

b. For riprap basket gabions, blanket gabions, rock fill - "n" = 0.045.

c. For Portland cement concrete-lined channels - "n" = 0.013.

4. Channel Surface Protection

a. Surface protection is an integral part of the design of any channel. Provision for channel surface protection must be made in contract documents and responsibility for maintenance of the channel between the time when earthwork is completed and installation of surface protection should be clearly stated.

b. Where computed average velocity in section exceeds 6 feet per second, an energy dissipater, concrete lining, stone riprap, riprap bags, fabriform or gabions must be used to protect the channel surface from erosion. Surface protection for velocities 6 feet per second or less shall be evaluated consistent with involved soil types.

c. Adjustments of channel gradients which are too steep for design conditions are best made by channel drops. Normally it is better to employ several low head drops instead of high drops. Sloped drops which fit channel topography are usually the most cost efficient. Sloped drops should have a rough surface and be no steeper than 2 to 1. All channel drops must be protected from erosion and being washed out.

5. Outfall Structures

a. Protection from erosion is required at all locations where a side drain or storm water sewer enters an open channel.

b. If the open channel is grass-lined, the side drain may employ a headwall, apron and wingwalls which are designed to fit the channel bank- or if the side drain is pipe, an end section may be

used provided it is supported by a toewall at least 2' in depth using portland cement concrete, grouted stone rip-rap, rip-rap bags, fabriform or gabions.

c. For grass-lined channels, the erosion protection in the form of portland cement concrete slab, stone rip-rap, rip-rap bags, fabriform or gabions shall extend across the overbank channel, down into and across the auxiliary channel (if applicable) and at least 2 feet up the opposite primary channel bank.

d. Erosion protection shall extend upstream and downstream from the centerline of any side drain a distance of 1 1/2 pipe diameters each direction or a minimum of 3 feet each direction.

6. Water Surface Profiles

a. Channel design must be accompanied by water surface profiles in a format which presents not only the profile but the geometric and hydraulic elements which are employed in the profile computations.

b. Any method which employs the Manning equation in a step-type iterative backwater analysis is acceptable for channel reaches between structures. At structures, an accounting for area reduction and wetted perimeter increase, such as at piers, piles, walls, etc. must be entered into the water surface elevation computations. Suggested text for analysis of flow through structures is "Hydraulics of Bridge Waterways" published by the Bureau of Public Roads, source of which is available by contacting the City/County Engineer.

c. An excellent example of method for computing water surface profiles is the Hydrologic Engineering Center Computer Program designated "HEC-2, Water Surface Profiles".

d. Where access to the HEC-2 computer program is not practical, the procedures outlined in Hydrologic Engineering Center Report, Volume 6, Water Surface Profiles, is recommended.

e. Where the starting elevation of a water surface profile is not known it should be estimated by making a "slope-area" or a "critical depth" computation for the channel being studied.

7. Freeboard

a. To protect against the damaging effects of wave action, air bulking, splash and spray, man-made channels should provide a minimum

of two foot of freeboard above the computed water surface profile for the design storm.

b. The minimum freeboard above flood of record or computed flood insurance base flood water surface profiles for natural rivers, creeks, sloughs, etc. shall be two foot.

c. Where buildings are immediately adjacent to a natural or man-made channel, the minimum building pad elevation for such structures is recommended to be two foot above the computed 100-year return flood water surface profile. If the project area is unstudied, three foot of freeboard is recommended.

Section II: General Criteria for Detention Design and Standards

1. Introduction

Storm water detention is a method by which the peak discharge of a drainage system is reduced through temporary storage in a reservoir having a control structure as its outlet. The capacity of the outlet structure limits the outflow of the reservoir to a quantity less than the inflow. Detention is used to decrease the required capacity of new drainage systems and to relieve or prevent over-charging of existing drainage systems. The City desires that detention storage be sized to reduce and/or limit peak runoff for the 5 -year and 100-year frequency storms from urbanized areas to the peak runoff for such storms as if the area was not urbanized.

The purpose of this section is to state the procedure and criteria to be used in the design and construction of detention systems.

As per current Kansas State Statutes, all dams capable of impounding thirty acre-feet or more at maximum stage require design approval and a permit from the Division of Water Resources of the Kansas State Board of Agriculture. Those structures of this size or larger must, therefore, meet both the design standards as herein set forth and the design standards and procedures of the Division of Water Resources.

2. Design Criteria

a. Site Exploration

Prior to design of a detention facility, the site shall be explored for surface and subsurface conditions, such as soil composition, water table, and subsurface geology.

b. Detention Storage Dam Design

All dams to be constructed within the urbanized area of the City shall be designed for Class C High Hazard in accordance with the Engineering Guide - I identified previously in comments on Chapter 4 of Manual No. 1.

c. Design Inflow

1) Peak flow rates
The methods of computing peak inflow are described in the previous discussion of Manual No. 1.

2) Soil Groups
For both urban and rural basins, the hydrologic soil groups will be found using the S.C.S. "Soil Survey of Sedgwick County".

d. Inflow Hydrograph

Inflow hydrographs for drainage areas ranging from 320 to 750 acres shall be developed using the S.C. S. dimensionless unit hydrograph procedures previously identified in Chapter 3 of Manual No. 1. Inflow hydrographs for drainage areas less than 320 acres shall be developed based on the 10-minute unit hydrograph equations shown in Table 4-5 of Manual No. I and the methodology as presented in the example beginning in Section 4.6.4.2. of Manual No. 1. The value for 0 shall be as identified in the table provided as "Attachment F".

e. Routing Methods

Routing of the inflow storm through the detention pond shall utilize the procedures identified in Chapter 4 of Manual No. 1. Complete dewatering of the detention portion of the facility shall take no more than 4 days.

f. Design and Construction of the Facility

Due to the great variance in soil types and subsurface conditions throughout this area, it is not practical to develop one specification for construction of embankments and ponds. There are, however, several general requirements that can be recommended at this time.

1) As previously mentioned prior to design the site shall be explored for surface and subsurface conditions. This work shall be done by a qualified testing laboratory under the direction of a licensed engineer.

2) The core of the embankment and the core trench shall be composed of impervious material.

3) Side slopes of the pond and embankment will be constructed in accordance with the standards stated in the section on open channel design.

4) Freeboard shall be designed following the same criteria as used in open channel design.

5) All areas above the static pool shall be seeded and mulched or sodded in compliance with the standards of the City.

6) During construction, there will be continual testing and inspection by a qualified testing laboratory under the direction of a licensed engineer with reports submitted to the City.

Section III: General Criteria for Storm Water Sewer Design and Standards

1. Introduction

Storm water sewer systems shall be designed as pressure systems for the initial storm when possible. Hydraulic grade line shall be a minimum of 6" below the street pavement gutter flow line at locations of inlets and manholes.

2. Design Criteria

a. Manning's coefficient of friction shall be as follows:

Reinforced concrete pipe (all sizes) n = 0.013; corrugated metal pipe 2 2/3" x 1/2" helical and circumferential corrugations (all sizes) n = 0.024; corrugated metal pipe 3 " x I" helical and circumferential corrugations (all sizes) n 0.027; corrugated metal pipe 6" x 2" helical and circumferential corrugations (all sizes) n = 0.033.

b. Storm sewers are required to be designed to provide for a minimum cleansing velocity of 2 feet per second at a depth of flow of 0.2 of the diameter or rise of the pipe.

Section IV: General Rules of Thumb for Design of Drainage and Storm Water Sewers

1. Whenever possible, set flow line elevations of pipes in structures such that the crowns of the pipes are at the same elevation.

2. Flow lines of pipes in structures may be set at elevations such that the 0. 8 depth points of the pipes are at the same elevation.

3. When main line pipe sizes change at a structure, the drop in flow line through the structure should be equal to the difference in the sizes of the pipe.

4. Provide 0.2-foot drop in the main line pipes through structures when the structures includes one side lateral. Provide 0.3-foot drop in the main line pipes through structures when the structures includes two or more laterals.

5. Provide 0.1 foot drop in the main line pipes through structures whenever the horizontal alignment of the main line pipes changes by 45' or greater.

6. A clearance of 2 feet is required between the top of the outside diameter of the pipe and the bottom of the street pavements when pipes are installed under or in close proximity to such pavement. A clearance of less than 2 feet will require specific approval by the City.

7. Manholes used on storm sewers normally will be City standard shallow Type A, shallow Type B, standard Type A, standard Type B, and standard reinforced concrete. Standard reinforced concrete manholes are normally used with pipe sizes 42" or larger. All openings into structures which are to be utilized to facilitate maintenance operations shall be centered on pipes entering and/or exiting such structures when possible.

8. Inlet, manhole, and headwall structures must always be evaluated to ensure that the structures have sufficient size to accommodate the various inflow and outflow pipes based on the alignment shown on the plan.

9. Drainage plans which require construction of erosion protection will be required to include detail drawings for the placement of such erosion protection for each specific location. Such details must show required elevations and horizontal dimensions.

10. All projects which require construction of channels and/or ponds shall include provisions for establishing grass cover as necessary to minimize erosion. Such projects shall also include provisions for mulching of slopes

which are more susceptible to erosion. Types of grass cover specified shall be compatible with the types of soil involved. Projects which have soil types that will not support development of good grass cover will require placement of suitable topsoil.

All pond banks shall include rip rap or other erosion protection items as approved by the City.

11. The City prefers inlet-manhole combination structures whenever possible. The City also prefers to construct manholes outside the limits of street pavement whenever possible. When necessary to construct manholes in street pavement, such manholes shall be Type B.

12. State and federal government agencies permit or approval requirements as related to certain types of drainage improvements must be adhered to as follows:

    a. Construction plan approval is required from the Tulsa Branch of the Corps of Engineers whenever a project requires crossing a Corps constructed levee or discharge into a Corps constructed channel. The Wichita - Valley Center Floodway was constructed by the Corps. This project included levees along the Big Arkansas River upstream from the point of diversion of the Big Arkansas River into the floodway and upstream from the point of discharge of the floodway back into the Big Arkansas River. The project also included a diversion channel and levees between the Big and Little Arkansas Rivers along with the Chisholm Creek Diversion Channel and levee system.

    b. The Kansas City Branch of the Corps of Engineers has jurisdiction of construction within the limits of the high bank or across the Little and Big Arkansas Rivers. Plans requiring construction within these limits must be sent to the Kansas City Branch of the Corps of Engineers for determination of permit requirements.

    c. A permit is required from the Division of Water Resources of the Kansas State Board of Agriculture when projects require excavation or construction of fill in a floodplain. The application of this permit requirement to projects which require construction in floodplains will be determined on an individual project basis on identification of the type and extent of the work involved.

    d. A permit is required from the Division of Water Resources of the Kansas State Board of Agriculture for those projects which include construction of a dam which would impound more than 30 acre-feet of water at the elevation of the top of the dam.

e. Contractors are required to obtain a permit from the Division of Water Resources of the Kansas State Board of Agriculture when it is necessary to dewater with wells and well points to facilitate construction.

13. Occasionally exceptions to the above-stated rules of thumb may arise. Such exceptions will be evaluated and approved on an individual case basis.

14. Public Storm Sewer Systems for non-paved areas may include the use of high-density polyethylene pipe (HDPE) and pre-fabricated inlets. Minimum diameter of storm sewer pipe for backyard systems shall be 12". Minimum diameter of all other storm sewer pipe, including culverts, shall be 15".

April 15, 1986

ATTACHMENT A
DRAINAGE CRITERIA MANUAL

RAINFALL INTENSITY TABLE FOR SEDGWICK COUNTY, KANSAS

The following tabulation contains rainfall intensity in inches per hour as derived from ESSA Weather Bureau Technical Paper 40 Modified to NWS Hydro-35, 1977 During First Hour

(t_c) DURATION IN MINUTES	RETURN PERIODS OF 1-YR	2-YR	5-YR	10-YR	25-YR	50-YR	100-YR
5	i = 4.18	5.57	6.53	7.41	8.52	9.48	10.32
6	3.99	5.32	6.25	7.09	8.16	9.09	9.89
7	3.81	5.09	5.99	6.81	7.84	8.74	9.50
8	3.66	4.89	5.75	6.55	7.55	8.42	9.15
9	3.52	4.70	5.54	6.31	7.28	8.13	8.83
10	3.39	4.52	5.34	6.09	7.04	7.86	8.54
11	3.27	4.36	5.16	5.89	6.81	7.61	8.27
12	3.18	4.21	4.99	5.71	6.60	7.38	8.02
13	3.05	4.08	4.84	5.53	6.41	7.17	7.79
14	2.96	3.95	4.69	5.37	6.23	6.97	7.57
15	2.87	3.83	4.56	5.22	6.06	6.78	7.37
16	2.78	3.72	4.43	5.08	5.90	6.60	7.18
17	2.71	3.61	4.31	4.95	5.75	6.44	7.00
18	2.63	3.51	4.20	4.83	5.61	6.29	6.84
19	2.56	3.42	4.10	4.71	5.47	6.14	6.68
20	2.50	3.33	4.00	4.60	5.35	6.00	6.53
21	2.44	3.25	3.90	4.50	5.23	5.87	6.39
22	2.38	3.17	3.81	4.40	5.12	5.75	6.26
23	2.32	3.10	3.73	4.31	5.01	5.63	6.13
24	2.27	3.03	3.65	4.22	4.91	5.52	6.01
25	2.22	2.96	3.57	4.13	4.81	5.41	5.90
26	2.20	2.90	3.50	4.05	4.72	5.31	5.79
27	2.16	2.84	3.43	3.98	4.63	5.21	5.69
28	2.14	2.78	3.37	3.90	4.55	5.12	5.59
29	2.11	2.72	3.30	3.83	4.47	5.03	5.49
30	2.08	2.67	3.24	3.76	4.39	4.94	5.40
31	2.05	2.62	3.19	3.70	4.32	4.86	5.32
32	2.02	2.57	3.10	3.63	4.25	4.79	5.22
33	1.99	2.52	3.05	3.57	4.18	4.71	5.14
34	1.96	2.48	3.01	3.51	4.11	4.63	5.07
35	1.93	2.44	2.98	3.46	4.05	4.56	5.00
36	1.91	2.39	2.93	3.41	3.99	4.50	4.93
37	1.89	2.35	2.88	3.36	3.93	4.43	4.86
38	1.87	2.32	2.84	3.31	3.87	4.37	4.79
39	1.85	2.28	2.80	3.26	3.82	4.31	4.73
40	1.83	2.24	2.76	3.22	3.76	4.25	4.66
41	1.81	2.21	2.72	3.17	3.71	4.19	4.60
42	1.79	2.18	2.68	3.13	3.66	4.13	4.54
43	1.77	2.14	2.64	3.09	3.61	4.08	4.49
44	1.75	2.11	2.61	3.05	3.57	4.03	4.43
45	1.73	2.08	2.57	3.01	3.52	3.98	4.38

ATTACHMENT A CONTINUED
Page 2

DURATION IN MINUTES	RETURN PERIODS OF 1-YR	2-YR	5-YR	10-YR	25-YR	50-YR	100-YR
46	1.70	2.05	2.54	2.97	3.48	3.93	4.33
47	1.67	2.02	2.50	2.93	3.44	3.88	4.28
48	1.66	2.00	2.47	2.90	3.39	3.84	4.23
49	1.64	1.97	2.44	2.86	3.35	3.79	4.18
50	1.61	1.95	2.41	2.83	3.32	3.75	4.13
51	1.59	1.92	2.38	2.79	3.28	3.71	4.09
52	1.56	1.89	2.35	2.76	3.24	3.67	4.05
53	1.54	1.86	2.33	2.73	3.20	3.63	4.00
54	1.52	1.84	2.30	2.70	3.17	3.59	3.96
55	1.50	1.81	2.27	2.67	3.14	3.55	3.92
56	1.47	1.79	2.25	2.64	3.10	3.51	3.88
57	1.45	1.76	2.22	2.61	3.07	3.48	3.84
58	1.43	1.74	2.20	2.59	3.04	3.44	3.81
59	1.42	1.72	2.18	2.56	3.01	3.41	3.77
60	1.40	1.69	2.15	2.53	2.98	3.37	3.73
61	1.38	1.67	2.13	2.51	2.95	3.34	3.70
62	1.36	1.65	2.11	2.48	2.92	3.31	3.67
63	1.34	1.63	2.09	2.46	2.89	3.28	3.63
64	1.33	1.61	2.07	2.44	2.86	3.25	3.60
65	1.31	1.59	2.05	2.41	2.84	3.22	3.57
66	1.30	1.57	2.03	2.39	2.81	3.19	3.54
67	1.28	1.56	2.01	2.37	2.79	3.16	3.51
68	1.26	1.54	1.99	2.35	2.76	3.13	3.48
69	1.25	1.52	1.97	2.33	2.74	3.10	3.45
70	1.24	1.50	1.95	2.31	2.71	3.08	3.42
71	1.22	1.49	1.93	2.28	2.69	3.05	3.39
72	1.21	1.47	1.92	2.26	2.67	3.02	3.36
73	1.20	1.46	1.90	2.25	2.64	3.00	3.34
74	1.18	1.44	1.88	2.23	2.63	2.98	3.31
75	1.17	1.43	1.86	2.21	2.61	2.95	3.29
76	1.16	1.41	1.85	2.19	2.58	2.93	3.26
77	1.15	1.40	1.83	2.17	2.55	2.90	3.24
78	1.13	1.38	1.82	2.15	2.53	2.88	3.22
79	1.12	1.37	1.80	2.14	2.50	2.86	3.19
80	1.11	1.36	1.79	2.12	2.48	2.84	3.16
81	1.10	1.34	1.77	2.10	2.46	2.82	3.13
82	1.09	1.33	1.76	2.08	2.43	2.79	3.10
83	1.08	1.32	1.74	2.06	2.41	2.76	3.07
84	1.07	1.31	1.73	2.04	2.39	2.74	3.04
85	1.06	1.30	1.72	2.02	2.37	2.71	3.01
86	1.05	1.28	1.70	2.00	2.34	2.69	2.99
87	1.04	1.27	1.69	1.99	2.32	2.66	2.96
88	1.03	1.26	1.68	1.97	2.30	2.64	2.93
89	1.02	1.25	1.68	1.95	2.28	2.62	2.91
90	1.01	1.24	1.66	1.93	2.26	2.59	2.88

DURATION IN MINUTES	RETURN PERIODS OF 1-YR	2-YR	5-YR	10-YR	25-YR	50-YR	100-YR
91	1.00	1.23	1.65	1.92	2.24	2.57	2.86
92	1.00	1.22	1.63	1.90	2.22	2.55	2.83
93	0.99	1.21	1.62	1.89	2.20	2.53	2.81
94	0.98	1.20	1.61	1.87	2.19	2.51	2.79
95	0.97	1.19	1.59	1.85	2.17	2.49	2.76
96	0.96	1.18	1.58	1.84	2.15	2.46	2.74
97	0.96	1.17	1.57	1.82	2.13	2.44	2.72
98	0.95	1.16	1.56	1.81	2.12	2.42	2.70
99	0.94	1.15	1.54	1.80	2.10	2.41	2.67
100	0.93	1.14	1.53	1.78	2.08	2.39	2.65
101	0.93	1.13	1.52	1.77	2.07	2.39	2.65
102	0.92	1.13	1.51	1.75	2.05	2.35	2.61
103	0.91	1.12	1.50	1.74	2.04	2.33	2.59
104	0.90	1.11	1.49	1.73	2.02	2.31	2.57
105	0.90	1.10	1.47	1.72	2.01	2.30	2.55
106	0.89	1.09	1.46	1.70	1.99	2.28	2.54
107	0.88	1.09	1.45	1.69	1.98	2.26	2.52
108	0.88	1.08	1.44	1.68	1.96	2.25	2.50
109	0.87	1.07	1.43	1.67	1.95	2.23	2.48
110	0.87	1.06	1.42	1.65	1.93	2.21	2.46
111	0.86	1.06	1.41	1.64	1.92	2.20	2.45
112	0.85	1.05	1.40	1.63	1.91	2.18	2.43
113	0.85	1.04	1.39	1.62	1.89	2.17	2.41
114	0.84	1.03	1.38	1.61	1.88	2.15	2.40
115	0.84	1.03	1.37	1.60	1.87	2.14	2.38
116	0.83	1.02	1.36	1.59	1.86	2.12	2.36
117	0.82	1.01	1.36	1.58	1.84	2.11	2.35
118	0.82	1.01	1.35	1.57	1.83	2.09	2.33
119	0.81	1.00	1.34	1.56	1.82	2.08	2.32
120	0.81	0.99	1.33	1.55	1.81	2.07	2.30

DURATION IN HOURS	RETURN PERIODS OF 1-YR	2-YR	5-YR	10-YR	25-YR	50-YR	100-YR
2	0.81	0.99	1.33	1.55	1.81	2.07	2.30
3	0.59	0.72	0.97	1.13	1.32	1.51	1.68
4	0.47	0.58	0.78	0.91	1.06	1.21	1.35
5	0.40	0.49	0.66	0.77	0.89	1.02	1.14
6	0.35	0.42	0.57	0.67	0.78	0.89	0.99
8	0.28	0.34	0.46	0.53	0.62	0.71	0.79
10	0.23	0.29	0.39	0.45	0.52	0.60	0.67
12	0.20	0.25	0.33	0.39	0.45	0.52	0.58
18	0.15	0.18	0.24	0.28	0.33	0.38	0.42
24	0.12	0.15	0.20	0.23	0.27	0.31	0.34

ATTACHMENT B

DRAINAGE CRITERIA MANUAL

INCREMENTAL INFILTRATION VALUES IN INCHES

Time Minutes**	SCS Hydrologic Soil Group A	B	C	D
5	.33	.26	.19	.12
10	.25	.17	.09	.04
15	.18	.11	.05	.02
20	.13	.07	.03	.02
25	.10	.05	.03	.02
30	.08	.05	.03	.02
35	.08	.05	.03	.02
40	.08	.05	.03	.02
45	.08	.05	.03	.02
50	.08	.05	.03	.02
55	.08	.05	.03	.02
60	.08	.05	.03	.02
65	.08	.05	.03	.02
70	.08	.05	.03	.02
75	.08	.05	.03	.02
80	.08	.05	.03	.02
85	.08	.05	.03	.02
90	.08	.05	.03	.02
95	.08	.05	.03	.02
100	.08	.05	.03	.02
105	.08	.05	.03	.02
110	.08	.05	.03	.02
115	.08	.05	.03	.02
120	.08	.05	.03	.02

**Time at end of the time increment

NOTE: Values for 125 minutes and additional 5 minute increments shall be the same as those shown for 120 minutes.

ATTACHMENT C

DRAINAGE CITERIA MANUAL

DEPRESSION STORAGE LOSSES

Surface Type	Total Loss (Inches)
Impervious:	
Paved Areas	0.1
Flat Roofs	0.1
Sloped Roofs	0.05
Pervious:	
Lawns and Grass	0.3
Wooded Areas and Open Fields	0.4

ATTACHMENT D

DRAINAGE CRITERIA

RECOMMENDED RUNOFF COEFFICIENTS FOR RATIONAL METHOD
AND PERCENT IMPERVIOUS FOR UNIT HYDROGRAPH METHOD

Land Use or Surface Characteristics	Percent Impervious	Frequency 2	5	10	100
1. Business:					
Downtown Areas	95	0.84	0.85	0.87	0.91
Neighborhood Areas	70	0.68	0.69	0.73	0.80
2. Residential:					
Single Family (Soil Group D)					
1/8 Acre	50	0.57	0.61	0.66	0.79
1/4 Acre	38	0.50	0.54	0.62	0.76
1/3 Acre	30	0.46	0.50	0.59	0.73
1/2 Acre	25	0.42	0.48	0.56	0.72
3/4 Acre	22	0.42	0.46	0.55	0.71
1 Acre	20	0.41	0.45	0.54	0.71
Multi-Family (Soil Group D)					
Multi-Unit (detached)	60	0.62	0.66	0.72	0.82
Multi-Unit (attached)	65	0.64	0.68	0.73	0.83
Apartments	75	0.70	0.73	0.79	0.86
Single Family (Soil Group C)					
1/8 Acre	50	0.55	0.58	0.64	0.73
1/4 Acre	38	0.48	0.51	0.57	0.68
1/3 Acre	30	0.43	0.46	0.53	0.65
1/2 Acre	25	0.40	0.43	0.50	0.63
3/4 Acre	22	0.39	0.42	0.49	0.62
1 Acre	20	0.37	0.40	0.48	0.61
Multi-Family (Soil Group C)					
Multi-Unit (detached)	60	0.60	0.63	0.69	0.77
Multi-Unit (attached)	65	0.63	0.66	0.71	0.79
Apartments	75	0.68	0.72	0.77	0.83
Single-Family (Soil Group B)					
1/8 Acre	50	0.52	0.54	0.59	0.67
1/4 Acre	38	0.44	0.46	0.52	0.61
1/3 Acre	30	0.39	0.41	0.47	0.57
1/2 Acre	25	0.36	0.38	0.44	0.54
3/4 Acre	22	0.34	0.36	0.42	0.52
1 Acre	20	0.33	0.35	0.40	0.51
Multi-Family (Soil Group B)					
Multi-Unit (detached)	60	0.58	0.60	0.65	0.72
Multi-Unit (attached)	65	0.61	0.64	0.68	0.75
Apartments	75	0.67	0.70	0.74	0.80

Land Use or rface Characteristics	Percent Impervious	Frequency 2	5	10	100
Single Family (Soil Group A)					
1/8 Acre	50	0.47	0.50	0.54	0.60
1/4 Acre	38	0.39	0.41	0.45	0.52
1/3 Acre	30	0.33	0.35	0.39	0.47
1/2 Acre	25	0.30	0.31	0.35	0.44
3/4 Acre	22	0.28	0.29	0.33	0.42
1 Acre	20	0.26	0.28	0.32	0.40
Multi-Family (Soil Group A)					
Multi-Unit (detached)	60	0.55	0.57	0.61	0.67
Multi-Unit (attached)	65	0.58	0.60	0.64	0.70
Apartments	75	0.65	0.68	0.72	0.77
3. Industrial:					
Light Areas	70	0.68	0.69	0.73	0.80
Heavy Areas	80	0.74	0.76	0.79	0.84
4. Playgrounds:	15	0.33	0.35	0.42	0.55
5. Schools:	40	0.49	0.51	0.56	0.66
6. Railroad Yard Areas:	30	0.43	0.45	0.50	0.62
Undeveloped Urban Areas: Offsite Flow Analysis (when land use not defined)	45	0.52	0.54	0.59	0.68
8. Streets:					
Paved	99	0.87	0.88	0.90	0.93
Gravel	00	0.24	0.26	0.33	0.48
9. Drive, Parking Lots and Walks:	96	0.87	0.87	0.88	0.89
10. Roofs:	90	0.80	0.85	0.90	0.93
11. Urban Lawn Areas (See Note No. 1 below):					
Soil Group A					
Slope less than 1%	00	0.08	0.09	0.13	0.23
Slope 1% to 4%	00	0.12	0.13	0.17	0.27
Slope more than 4%	00	0.16	0.17	0.21	0.31
Soil Group B					
Slope less than 1%	00	0.16	0.18	0.24	0.37
Slope 1% to 4%	00	0.20	0.22	0.28	0.41
Slope more than 4%	00	0.24	0.26	0.32	0.45
Soil Group C					
Slope less than 1%	00	0.24	0.27	0.35	0.51
Slope 1% to 4%	00	0.26	0.29	0.37	0.53
Slope more than 4%	00	0.28	0.31	0.39	0.55

Land Use or rface Characteristics	Percent Impervious	Frequency 2	5	10	100
Soil Group D					
Slope less than 1%	00	0.28	0.33	0.43	0.63
Slope 1% to 4%	00	0.30	0.35	0.45	0.65
Slope more than 4%	00	0.32	0.37	0.47	0.67

Note No. 1: Coefficients shown in the above table are for pervious open space areas with thick turf which includes pervious areas in parks and cemeteries. Coefficients shown above must be increased 0.02 for use with agricultural pasture areas. Coefficients shown above must be reduced by 0.04 for use with agricultural cultivated areas. Group A soils are well-drained, coarse textured sands with high infiltration rates. Group B soils are moderately well-drained, moderately coarse textured soils with moderate infiltration rates. Group C soils are moderately poor-drained, moderately fine textured soils with slow infiltration rates. Group D soils are poor-drained, fine textured soils with very slow infiltration rates.

GENERAL NOTE: These Rational Formula Coefficients may not be valid for basins 320 acres or larger.

ATTACHMENT E

DRAINAGE CRITERIA

AVERAGE OVERLAND FLOW VELOCITY FOR USE WITH URBANIZED AREAS

Surface Type	VELOCITY IN FEET/SECOND FOR SLOPES IN PERCENT SHOWN																			
	0.1	0.2	0.3	0.4	0.5	0.6	0.7	0.8	0.9	1.0	2.0	3.0	4.0	5.0	6.0	7.0	8.0	9.0	10.0	20.0
Forest with Heavy Ground Litter or Meadow	0.03	0.04	0.06	0.07	0.08	0.09	0.10	0.11	0.12	0.13	0.16	0.21	0.28	0.33	0.39	0.46	0.53	0.60	0.72	1.10
Fallow or Minimum Tillage Cultivation	0.06	0.08	0.10	0.12	0.13	0.14	0.16	0.17	0.18	0.19	0.29	0.40	0.51	0.66	0.78	0.91	1.05	1.20	1.44	2.10
Short Grass Pasture or Lawns	0.09	0.13	0.15	0.18	0.20	0.21	0.23	0.25	0.26	0.28	0.45	0.60	0.77	0.96	1.17	1.33	1.50	1.68	1.98	3.20
Almost Bare Ground	0.16	0.22	0.28	0.31	0.35	0.38	0.41	0.44	0.46	0.49	0.70	0.85	1.05	1.26	1.50	1.75	2.03	2.32	2.79	4.40
Grassed Waterway	0.35	0.48	0.58	0.67	0.77	0.84	0.91	0.98	1.05	1.12	1.54	1.82	2.10	2.38	2.78	3.20	3.66	4.14	4.56	7.00
Paved Areas (Sheet Flow) or Shallow Gutter Flow	0.44	0.62	0.77	0.91	1.05	1.12	1.19	1.26	1.33	1.40	2.00	2.55	3.20	3.83	4.41	5.04	5.70	6.00	6.20	9.00

ATTACHMENT F

DETERMINATION OF DIMENSIONLESS
WATERSHED CONVEYANCE FACTOR (Ø)

$$Ø = Ø_1 + Ø_2$$

$Ø_1$	Classification
0.6	Extensive channel improvement and storm sewer system, closed conduit channel system
0.7	Moderate channel improvement and storm sewer system.
0.8	Some channel improvement and storm sewers, mainly cleaning and enlargement of existing channel.
0.9	Little channel improvement and storm sewers.
1.0	Natural channel conditions.

$Ø_2$	Classification
0.0	No channel vegetation.
0.1	Light channel vegetation.
0.2	Moderate channel vegetation.
0.3	Heavy channel vegetation.

EXHIBIT NO. 1

SOIL LEGEND

SYMBOL	HYDROLOGIC GROUP	NAME
Aa	B	Albion-Shellabarger sandy loams, 1 to 4 percent slopes
Ab	B	Albion and Shellabarger sandy loans, 7 to 15 percent slopes
Ba	C	Blanket silt loam, 0 to 1 percent slopes
Bb	C	Blanket silt loan, 1 to 3 percent slopes
Ca	B	Canadian fine sandy loan
Cb	B	Canadian-Waldeck fine sandy loams
Cc	D	Carwile fine sandy loam
Cd	B	Clark-Ost clay loams, 1 to 4 percent slopes
Ce	C	Clime silty clay, 3 to 6 percent slopes
Ea	B	Elandco silt loam
Eb	B	Elandco silt loam, occasionally flooded
Ec	B	Elandco silt loam, frequently flooded
Fa	B	Farnum loam, 0 to 1 percent slopes
Fb	B	Farnum loam, 1 to 3 percent slopes
Fc	B	Farnum loam, sandy substratum, 0 to 1 percent slopes
Ga	D	Goessel silty clay, 0 to 1 percent slopes
Gb	D	Goessel silty clay, 1 to 2 percent slopes
Ia	D	Irwin silty clay loam, 1 to 3 percent slopes
Ib	D	Irwin silty clay loam, 3 to 6 percent slopes
Ic	D	Irwin silty clay loam, 2 to 6 percent slopes, eroded
La	C	Lesho loam
Lb	A	Lincoln soils
Ma	B	Milan loam, 1 to 3 percent slopes
Mb	B	Milan form, 3 to 6 percent slopes
Mc	B	Milan clay loam, 2 to 6 percent slopes, eroded
Na	B	Naron fine sandy loam
Oc	D	Owens clay loam, 1 to 3 percent slopes
Od	D	Owens-Rock outcrop complex, 3 to 10 percent slopes
Pa		Pits
Pb	D	Plevna fine sandy loam
Pc	A	Pratt loamy fine sand, undulating
Pd	A	Pratt-Tivoli complex, rolling
Ra	D	Renfrow silty clay loam, 1 to 3 percent slopes
Rb	D	Renfrow silty clay loam, 3 to 6 percent slopes
Rc	D	Renfrow-Owens clay loams, 1 to 4 percent slopes
Rd	D	Rosehill silty clay, 1 to 3 percent slopes
Sa	B	Shellabarger sandy loam, 1 to 3 percent slopes
Sb	B	Shellabarger sandy loam, 3 to 6 percent slopes
Sc	B	Shellabarger sandy loam, 3 to 6 percent slopes, eroded
Ta	D	Tabler silty clay loam
Tb	D	Tabler-Drummond complex
Ua	B	Urban land-Canadian complex
Ub	B	Urban land-Elandco complex
Uc	B	Urban land-Farnum complex, 0 to 3 percent slopes
Ud	D	Urban land-Irwin complex, 1 to 3 percent slopes
Ue	D	Urban land-Tabler complex
Va	B	Vanoss silt loam, 0 to 1 percent slopes
Vb	B	Vanoss silt loam, 1 to 3 percent slopes
Vc	B	Vanoss silt loam, 3 to 6 percent slopes
Vd	B	Vanoss silt loam, 3 to 6 percent slopes, eroded
Ve	D	Vernon sandy loam, 1 to 3 percent slopes
Vf	D	Vernon sandy loam, 3 to 6 percent lopes
Wa	C	Waldeck sandy loam
Wb	D	Waurika silt loam

EXHIBIT NO. 2

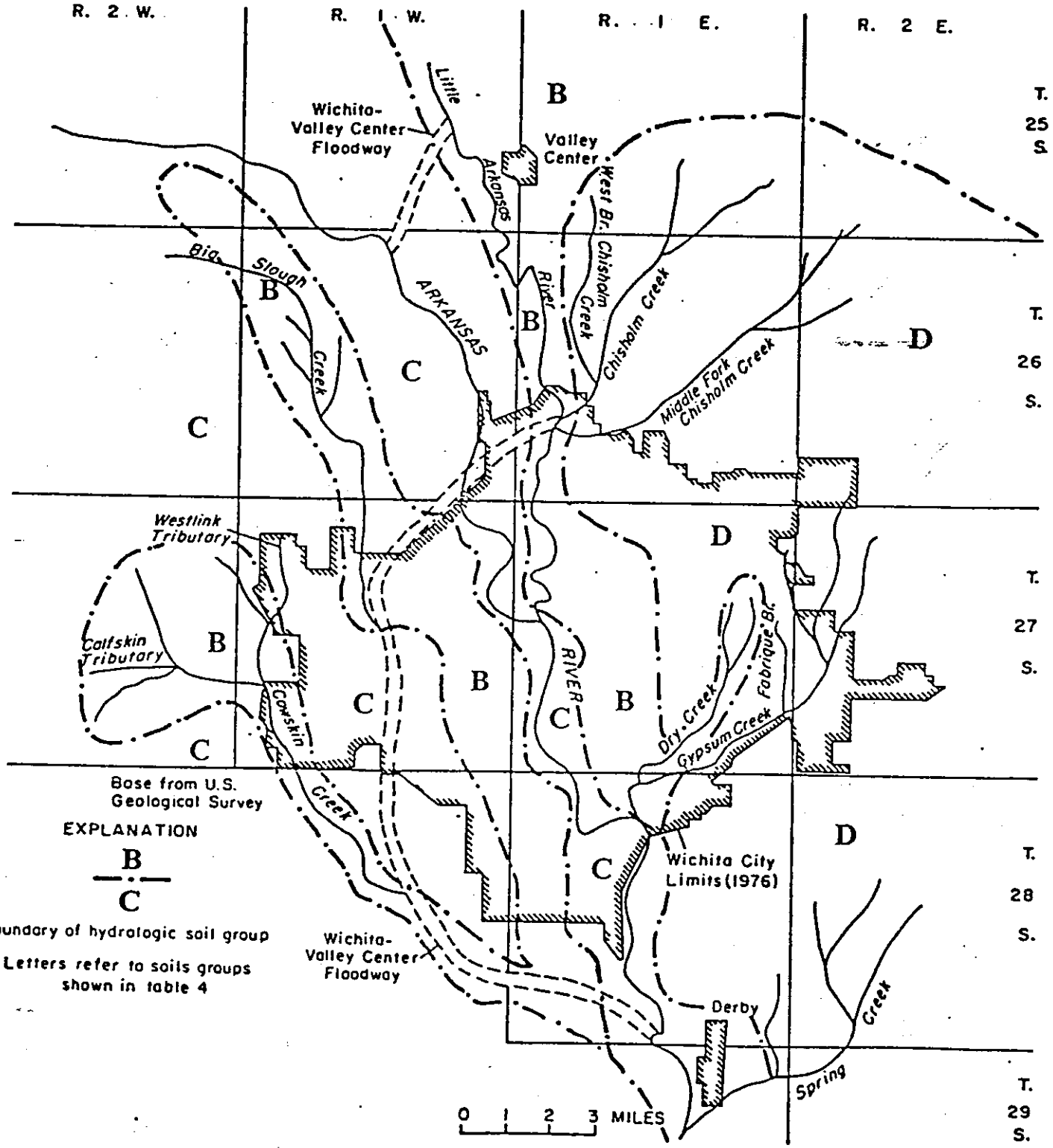
R. 2 W.
R. 1 W.
R. 1 E.
R. 2 E.
T. 25 S.
T. 26 S.
T. 27 S.
T. 28 S.
T. 29 S.
Wichita-Valley Center Floodway
Valley Center
Little Arkansas River
West Br. Chisholm Creek
Chisholm Creek
Middle Fork Chisholm Creek
Big Slough Creek
ARKANSAS RIVER
Westlink Tributary
Catfskin Tributary
Cowskin Creek
Dry Creek
Fabrique Br.
Gypsum Creek
Wichita City Limits (1976)
Derby
Spring Creek
Base from U.S. Geological Survey
EXPLANATION
B
C
Boundary of hydrologic soil group
Letters refer to soils groups shown in table 4
0 1 2 3 MILES

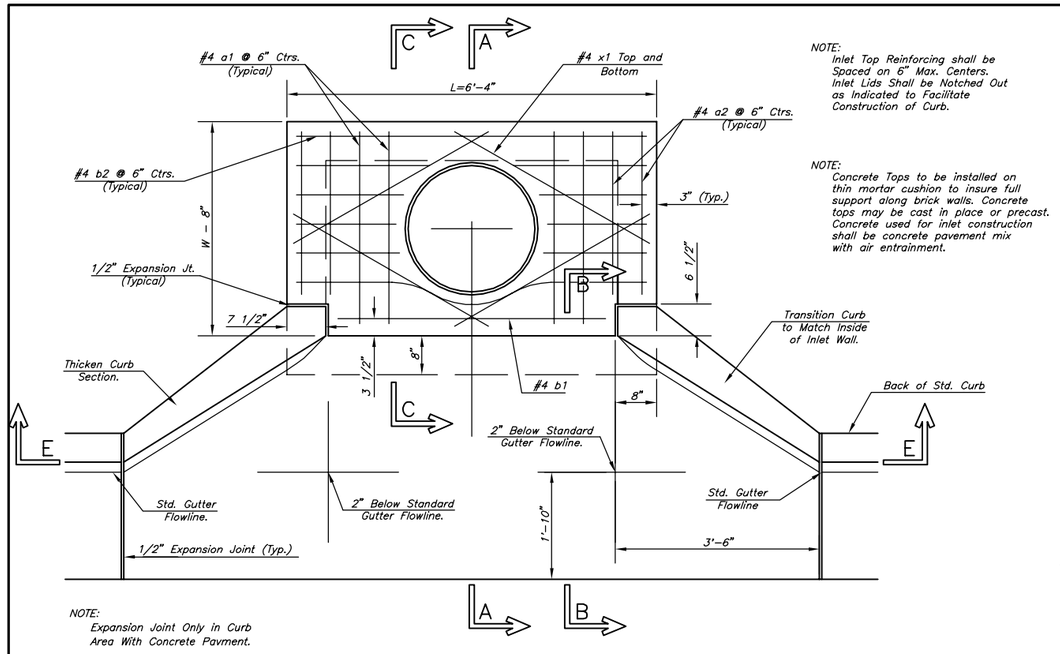

NOTE:
Expansion Joint Only in Curb Area With Concrete Pavment.

NOTE:
Inlet Top Reinforcing shall be Spaced on 6" Max. Centers. Inlet Lids Shall be Notched Out as Indicated to Facilitate Construction of Curb.

NOTE:
Concrete Tops to be installed on thin mortar cushion to insure full support along brick walls. Concrete tops may be cast in place or precast. Concrete used for inlet construction shall be concrete pavement mix with air entrainment.

PLAN

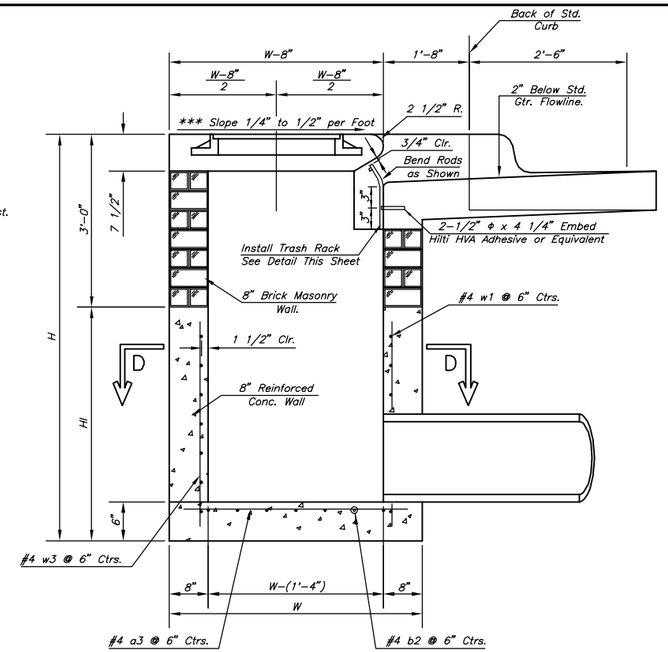

SECTION A–A

***NOTE: Slope of Inlet tops to Match Sidewalk or Parking Slopes within Limits Indicated.

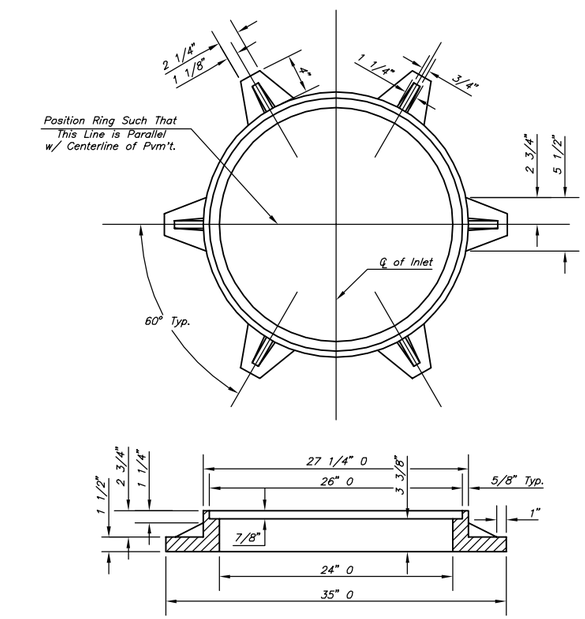

MANHOLE RING AND COVER

Weight = 180 Lbs.

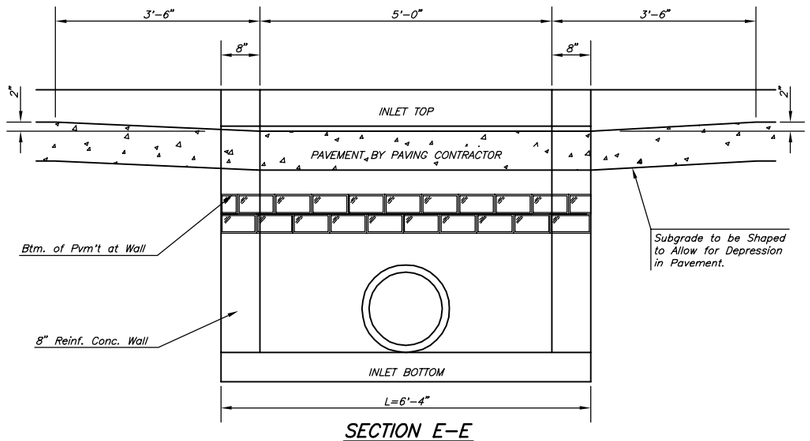

SECTION E–E

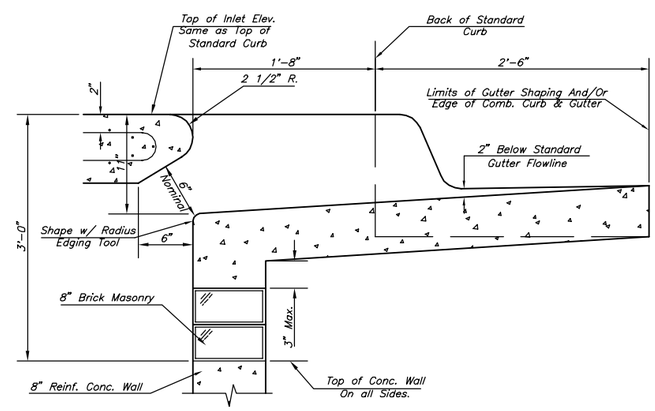

SECTION B–B

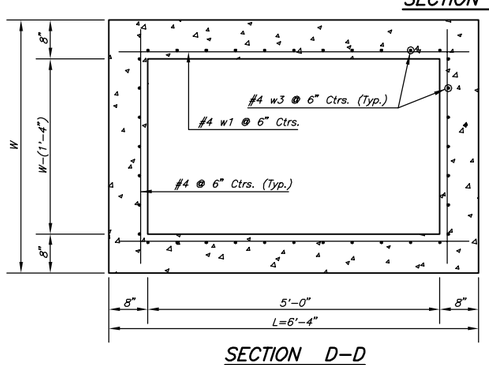

SECTION D–D

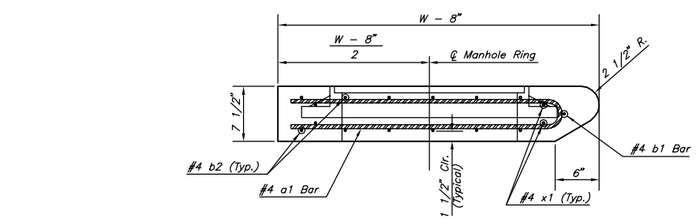

SECTION C–C

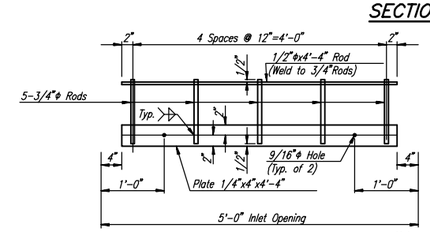

TRASH RACK DETAIL

For Curb Inlet

Note:
All parts of rack are galvanized.

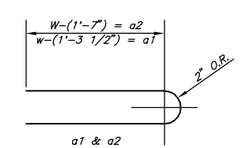

BENDING DIAGRAM

PRECAST SLAB AND FLOOR REINFORCING

		W = 4'-4"		W = 5'-4"		W = 6'-4"		W = 7'-4"		W = 8'-4"	
MARK	SIZE	NO.	LENGTH	NO.	LENGTH	NO.	LENGTH	NO.	LENGTH	NO.	LENGTH
* a1	#4	6	6'-7"	6	8'-7"	6	10'-7"	6	12'-7"	6	14'-7"
a2	#4	4	6'-0"	4	8'-0"	4	10'-0"	4	12'-0"	4	14'-0"
a3	#4	13	4'-1"	13	5'-1"	13	6'-1"	13	7'-1	13	8'-1"
b1	#4	1	4'-9"	1	4'-9"	1	4'-9"	1	4'-9"	1	4'-9"
* b2	#4	23	6'-1"	29	6'-1"	35	6'-1"	41	6'-1"	47	6'-1"
x1	#4	8	3'-10"	8	4'-2"	8	4'-6"	8	4'-10"	8	5'-2"

WALL REINFORCING

		W = 4'-4"		W = 5'-4"		W = 6'-4"		W = 7'-4"		W = 8'-4"	
MARK	SIZE	NO.	LENGTH	NO.	LENGTH	NO.	LENGTH	NO.	LENGTH	NO.	LENGTH
w1	#4	①	6'-1"	①	6'-1"	①	6'-1"	①	6'-1"	①	6'-1"
w2	#4	①	4'-1"	①	5'-1"	①	6'-1"	①	7'-1"	①	8'-1"
w3	#4	32	②	36	②	40	②	44	②	48	②

* Field Bend or Cut Reinforcing as Required for Clearance.
① H (HI - 12") (HI - 21") Rounded down to nearest 0.5'
② HI - 3"

NOTE: Contractor shall have the option of constructing 8" brick masonry walls between the concrete inlet base and top on this inlet when W=6'-4" and H=7'-0" or less.

Additional curb and gutter construction necessary to connect set-back inlet to pavement will be paid for at the unit price bid for each inlet hookup.

Inlet invert shall be shaped with 8 sack sand mix concrete to create flow channels and to increase hydraulic efficiency such that the inlet will be self-cleaning between all inlet and/or outlet pipes.

The ends of all pipes installed in inlets shall be cut off flush with the inside face of the inlet wall

STANDARD CURB INLET PRECAST TOPS

W	PRE-CAST TOP SIZE	PIPE SIZE	CU. YD. CONC.
4'-4"	3'-8" x 6'-4" x 7 1/2"	21" & SMALLER	0.38±
5'-4"	4'-8" x 6'-4" x 7 1/2"	24" & 30"	0.51±
6'-4"	5'-8" x 6'-4" x 7 1/2"	36" & 42"	0.64±
7'-4"	6'-8" x 6'-4" x 7 1/2"	48" & 54"	0.77±
8'-4"	7'-8" x 6'-4" x 7 1/2"	60" & 66"	0.90±

No.	Revision	By	Date
	JANUARY 2008		

CITY OF VALLEY CENTER
SEDGWICK COUNTY, KANSAS

STANDARD TYPE 1-A CURB INLET OPENING = 6" x 5'-0"

Professional Engineering Consultants, P.A.
303 S. TOPEKA • WICHITA, KANSAS 67202
316-262-2691 • FAX 316-262-3003

Designed by	PEC	Job No.	Sheet of
Drawn by	PEC	Date JULY 2002	

Saved 04-04-2008 6:26:38 AM by REJ
Plot Scale 1:1 Plot Date 04-04-2008 6:50:18 AM by REJ
O:\Valley Center\2007\2008 Updates\Figure III-01

FIGURE III-1

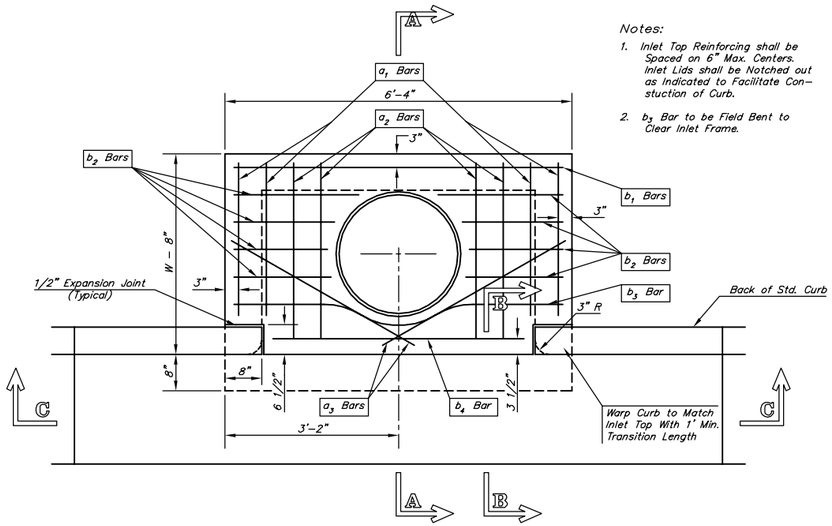

Notes:

1. Inlet Top Reinforcing shall be Spaced on 6" Max. Centers. Inlet Lids shall be Notched out as Indicated to Facilitate Con-stuction of Curb.
2. b_3 Bar to be Field Bent to Clear Inlet Frame.

PLAN

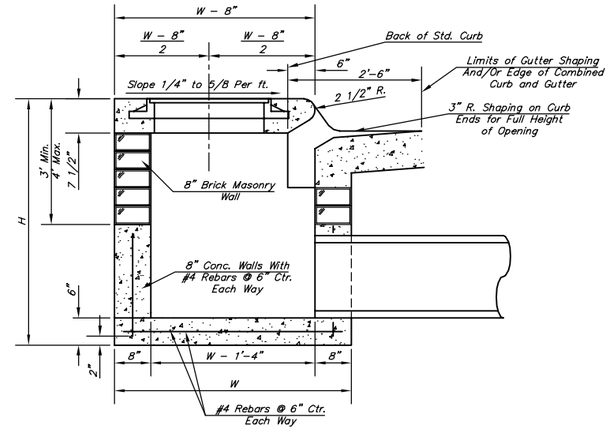

SECTION A–A

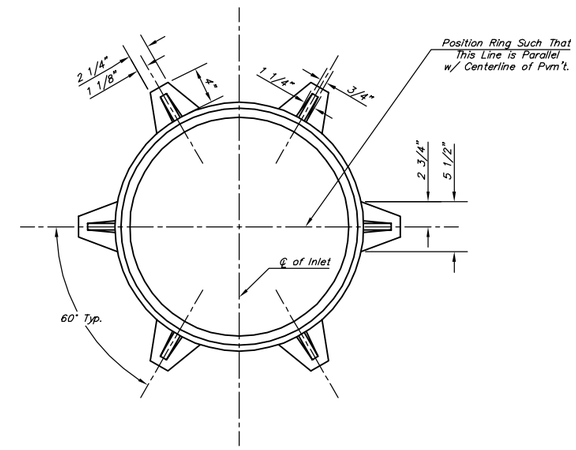

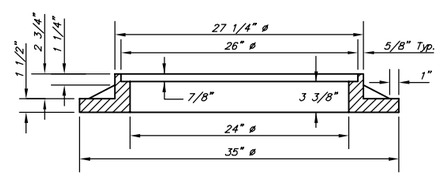

MANHOLE RING AND COVER

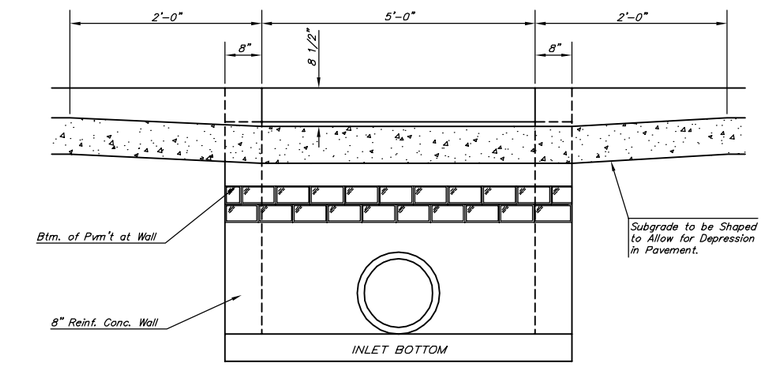

SECTION C–C

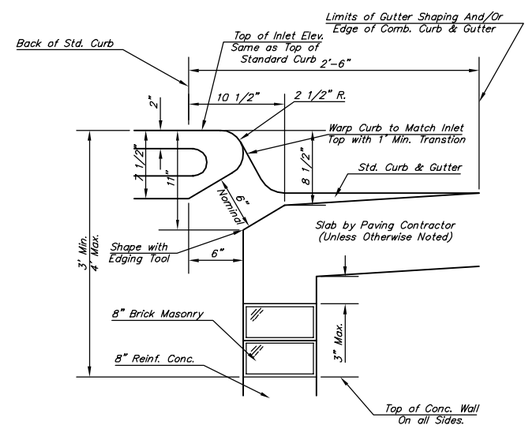

SECTION B–B

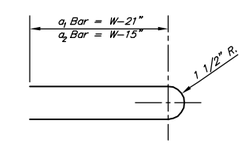

BENDING DIAGRAM

STEEL SCHEDULE

BAR		a_1	a_2	a_3	b_1 W=4'-4"	b_1 W=5'-4"	b_1 W=6'-4"	b_1 W=7'-4"	b_1 W=8'-4"	b_2	b_3	b_4	Wt. Lbs.
NUMBER		4	4	2	1	3	5	7	9	6	1	1	
SIZE		#4	#4	#4	#4	#4	#4	#4	#4	#4	#4	#6	
LENGTH	W=4'-4"	5'-7"	6'-7"	4'-0"	6'-1"	–	–	–	–	1'-9"	6'-2"	4'-8"	60±
	W=5'-4"	7'-7"	8'-7"	5'-0"	–	6'-1"	–	–	–	1'-9"	6'-2"	4'-8"	81±
	W=6'-4"	9'-7"	10'-7"	6'-0"	–	–	6'-1"	–	–	1'-9"	6'-2"	4'-8"	101±
	W=7'-4"	11'-7"	12'-7"	7'-0"	–	–	–	6'-1"	–	1'-9"	6'-2"	4'-8"	121±
	W=8'-4"	13'-7"	14'-7"	8'-0"	–	–	–	–	6'-1"	1'-9"	6'-2"	4'-8"	141±

Note: a_3 Bars to be Placed Approx. 2" Below Top of Inlet Cover.

STANDARD CURB INLET PRECAST TOPS

W	PRE-CAST TOP SIZE	PIPE SIZE	CU. YD. CONC.
4'-4"	3'-8" 6'-4" 7 1/2"	21" & SMALLER	0.38±
5'-4"	4'-8" 6'-4" 7 1/2"	24" & 30"	0.51±
6'-4"	5'-8" 6'-4" 7 1/2"	36" & 42"	0.64±
7'-4"	6'-8" 6'-4" 7 1/2"	48" & 54"	0.77±
8'-4"	7'-8" 6'-4" 7 1/2"	60" & 66"	0.90±

GENERAL NOTES

1. Concrete tops to be installed on thin mortar cushion to insure full support along brick walls. Concrete tops may be cast in place or precast. Concrete used for inlet construction shall be concrete pavement mix.
2. Contractor shall have the option of constructing 8" brick masonry walls between the concrete inlet base and top on this inlet when W=6'-4" and H=7'-0" or less.
3. Inlet invert shall be shaped with 8 sack sand mix concrete to create flow channels and to increase hydraulic efficiency such that the inlet will be self cleaning between all inlet and/or outlet pipes.
4. The ends of all pipes installed in inlets shall be cut off flush with the inside face of the inlet wall.

No.	Revision	By	Date
	JANUARY 2008		

CITY OF VALLEY CENTER
SEDGWICK COUNTY, KANSAS

STANDARD TYPE 1 CURB INLET
OPENING = 6" x 5'-0"

Professional Engineering Consultants, P.A.
303 S. TOPEKA • WICHITA, KANSAS 67202
316-262-2691 • FAX 316-262-3003

Designed by	PEC	Job No.	Sheet of
Drawn by	PEC	Date JULY 2002	

Saved 04-04-2008 6:26:30 AM by REG
Plot Scale 1:1 (1:1) 04-04-2008 8:50:00 AM by REG
C:\1994\94355\001\2008 Updates\Figure III-02

FIGURE III–2

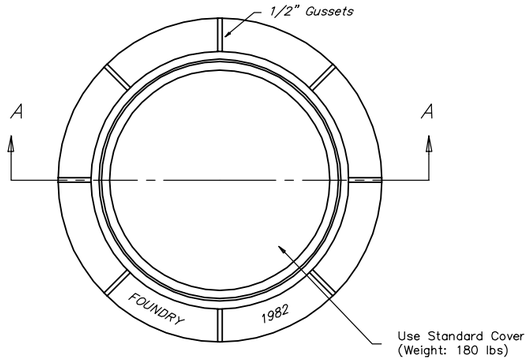

TOP VIEW

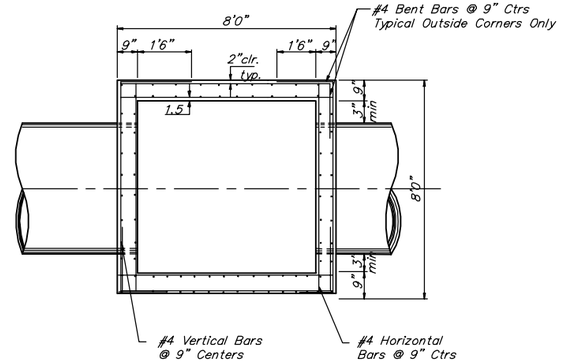

NOTE:
Bend Bars Not More Than 8" to Clear Pipes, or Cut Bars 2" Clear of Pipe, as Necessary.

SECTION B–B

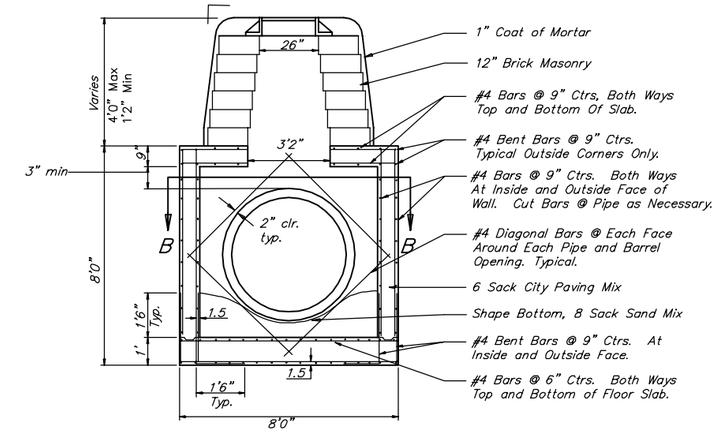

REINFORCED CONCRETE MANHOLE
STACK 2.33' TO 4'0"

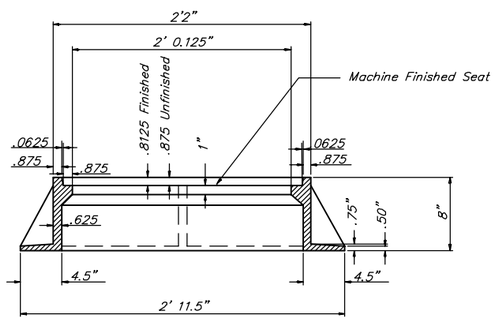

SECTION A–A

MANHOLE FRAME
Weight: 240 Lbs.

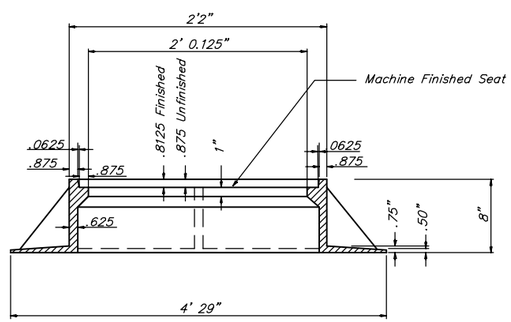

WIDE FLANGE RING
Weight: 705 Lbs.

GENERAL NOTES:

1. MORTAR USED IN MASONRY CONSTRUCTION SHALL CONTAIN 8 SACKS OF CEMENT PER CUBIC YARD. CONCRETE USED IN MANHOLE WALLS AND BASES SHALL CONFORM TO THE REQUIREMENTS FOR CONCRETE PAVEMENT CONSTRUCTION AS SPECIFIED IN THE CITY STANDARD PAVING SPECIFICATIONS, USING CITY CONCRETE PAVEMENT MIX WITHOUT AIR ENTRAINING ADMIXTURE. MORTAR SHALL BE PLACED AROUND THE MANHOLE RING AS SHOWN ON THE DRAWINGS WHEN MANHOLES ARE CONSTRUCTED IN UNPAVED AREAS. COMPLETED MANHOLE SHALL BE WITHOUT LEAKS AND WATER TIGHT.

2. THE FLOORS OF ALL MANHOLES SHALL BE SHAPED WITH FLOW CHANNELS SUCH THAT THE MANHOLES WILL BE SELF CLEANING. USING 8–SACK SAND MIX CONCRETE. FLOW CHANNELS SHALL BE FORMED TO MATCH THE BOTTOM HALVES OF THE INFLOWING PIPES AND THE OUTFLOWING PIPE. MANHOLE FLOORS SHALL HAVE SLOPES OF 3 INCHES PER FOOT IN THE AREAS OUTSIDE OF THE FLOW CHANNELS SLOPED TOWARD THE FLOW CHANNELS.

3. MANHOLE COVER CASTINGS AND MANHOLE FRAME CASTINGS SHALL CONFORM TO THE RE–QUIREMENTS AS INDICATED IN THE STANDARD SPECIFICATIONS AND AS SHOWN IN THE STANDARD DETAIL DRAWING.

4. THE ENDS OF ALL PIPES IN MANHOLES SHALL BE CUT OFF FLUSH WITH THE INSIDE FACE OF MANHOLE WALL.

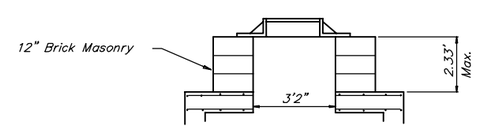

MANHOLE STACK LESS THAN 2.33'

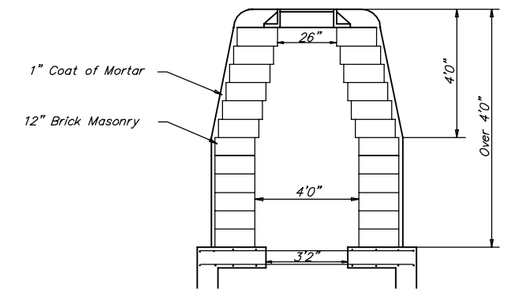

MANHOLE STACK OVER 4'0"

No.	Revision	By	Date
	JANUARY 2008		

CITY OF VALLEY CENTER
SEDGWICK COUNTY, KANSAS

REINFORCED CONCRETE MANHOLE

Professional Engineering Consultants, P.A.
303 S. TOPEKA • WICHITA, KANSAS 67202
316-262-2691 • FAX 316-262-3003

Designed by	PEC	Job No.	Sheet of
Drawn by	PEC	Date JULY 2002	

Saved 04-04-2008 6:26:18 AM by RFJ
Plot Scale 1:1 Layout 04-04-2008 6:49:37 AM by RFJ
P:\1989\89355\001\2008 Updates\Figure III-3

FIGURE III–3

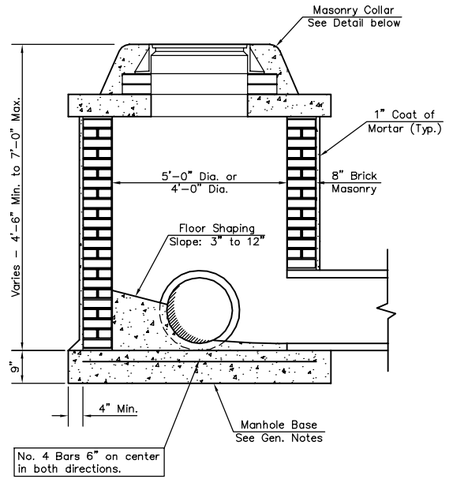

SHALLOW TYPE "A" MANHOLE

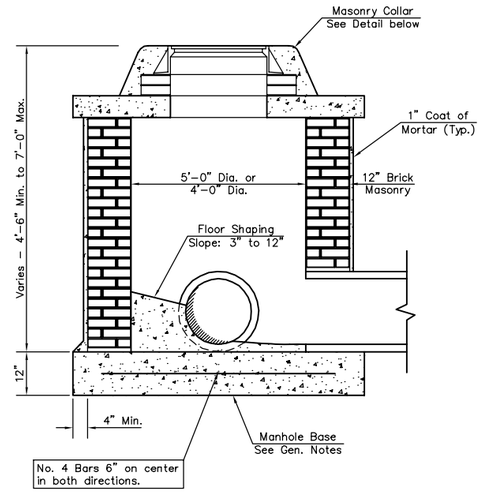

SHALLOW TYPE "B" MANHOLE

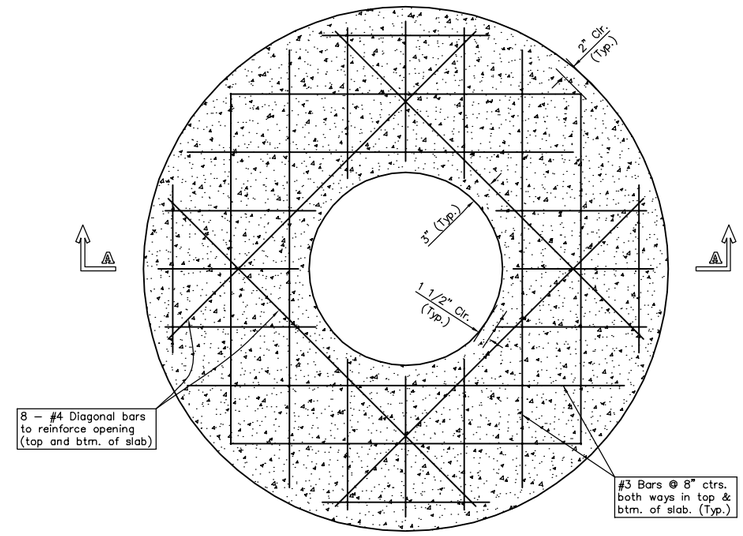

PLAN

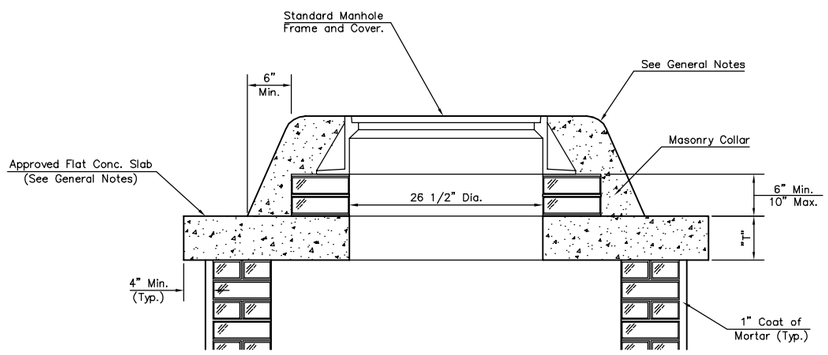

MASONRY COLLAR DETAIL

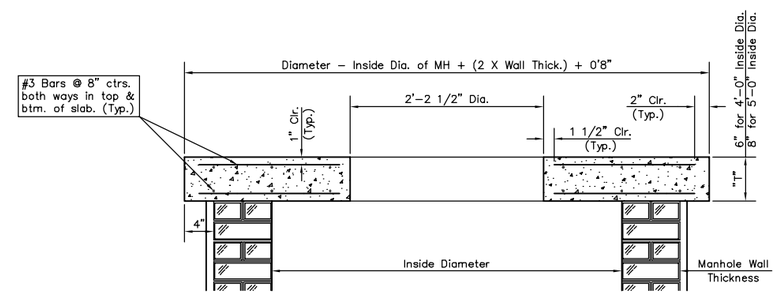

SECTION A–A

FLAT CONCRETE SLAB DETAILS

GENERAL NOTES

1. Mortar used in masonry construction shall contain 8 sacks of cement per cubic yard. Concrete used in manhole bases shall conform to the requirements of concrete for concrete pavement construction as specified in the city standard paving specifications using city concrete cement mix without air entraining admixture. Mortar shall be placed around the manhole ring as shown on the drawings when manholes are constructed in unpaved areas. Type "A" shallow manholes can be used on sewers when the manhole is not located within public street pavement. Manholes constructed where pipe sizes are smaller than 24" shall have an inside diameter of 4'. Manholes constructed where pipe sizes are 24" or larger shall have an inside diameter of 5'. Completed manhole shall be without leaks and water tight.

2. Reinforcing steel shall be installed in the manhole bases and shall consist of no. 4 bars placed on 6" centers in both directions. The manhole base reinforcement shall be placed 6" above the bottom of the manhole base. All costs for furnishing and installing reinforcing steel shall be included in the unit price bid for the manhole.

3. The floors of all manholes shall be shaped with flow channels such that the manholes will be self cleaning and free of areas where solids could be deposited as sewage flows through the manhole from all inlet pipes to the outlet pipe. Flow channels shall be formed to match the bottom halves of the inflowing pipes and the outflowing pipe as shown by the drawings. Manhole floors shall have slopes of 3 inches per foot in the areas outside of the flow channels sloped toward the flow channels. Pipes laid through manholes shall have the top half removed to neat lines for the full inside diameter of the manhole. Manhole floors shall then be shaped around the bottom half of the pipe which forms the flow channel.

4. Pipes installed within the excavation made for the manhole shall be cradled with concrete to the limits of the manhole excavation. When clay pipe is used, the cradle shall extend to the first joint outside the manhole. The cradle shall be terminated at the clay pipe joint in a manner which will maintain the flexibility of the joint. Cost of cradle within manhole excavation or to clay pipe joints adjacent to manhole shall be included in the unit price bid for the manhole.

5. Manhole cover castings and manhole frame castings shall conform to the requirements as indicated in the standard specifications and as shown in the standard detail drawings.

6. The crowns of inflowing pipes shall never be set lower than the crown of the outflowing pipe.

7. Standard shallow manholes type "A" and "B" shall be paid for at the unit price bid per each for the type and diameter indicated. Standard special shallow manholes type "A" and "B" shall be paid for at the unit price bid per each for the type indicated. All standard shallow manhole diameters will be 4' unless indicated otherwise.

8. All brick used in manhole construction shall meet Grade SW of ASTM C652 or C62–87.

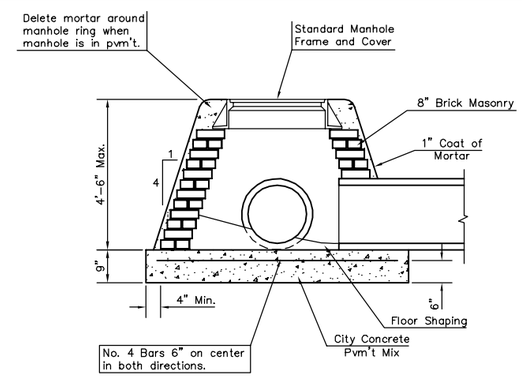

SPECIAL SHALLOW TYPE "A" MANHOLE

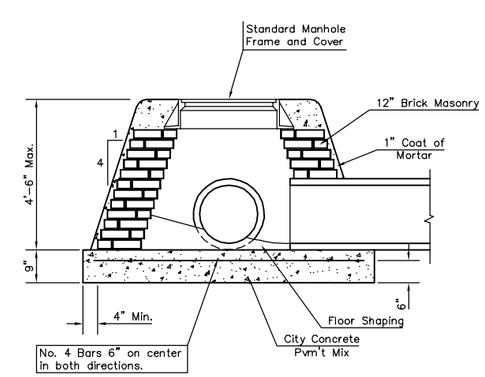

SPECIAL SHALLOW TYPE "B" MANHOLE

No.	Revision	By	Date
	JANUARY 2008		

CITY OF VALLEY CENTER
SEDGWICK COUNTY, KANSAS

STANDARD/SPECIAL SHALLOW MANHOLES TYPE 'A' & 'B'

Professional Engineering Consultants, P.A.
303 S. TOPEKA • WICHITA, KANSAS 67202
316-262-2691 • FAX 316-262-3003

Designed by	PEC	Job No.	Sheet of
Drawn by	PEC	Date JULY 2002	

FIGURE III–4

Saved 04-04-2008 6:26:56 AM by REJ
Plot Scale 1:2.153 04-04-2008 6:49:17 AM by REJ
Q:\1989\89355\001\2008 Updates\Figure III-04

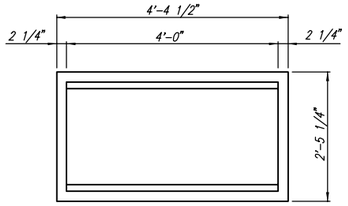

FRAME DETAIL
(Wt.=460 lbs.)

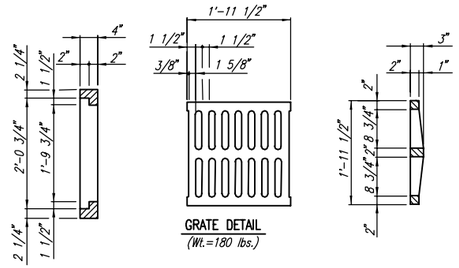

GRATE DETAIL
(Wt.=180 lbs.)

GENERAL NOTES

CONCRETE SHALL BE CITY STANDARD PAVING MIX. ALL EXPOSED EDGES SHALL BE FINISHED WITH AN APPROVED EDGING TOOL.

REINFORCING STEEL SHALL BE A MINIMUM GRADE 40, A.S.T.M. A615. ALL DIMENSIONS RELATIVE TO PLACEMENT OF REINFORCING ARE TO THE CENTERLINE OF BARS UNLESS OTHERWISE NOTED.

INLET CASTINGS SHALL BE MANUFACTURED USING GOOD QUALITY GRAY IRON CONFORMING TO CLASS 30 OF A.S.T.M. DESIGNATION A-48. DIMENSIONS AND WEIGHTS SHOWN ON THE DETAILED DRAWINGS SHALL BE CONSIDERED AS MINIMUM REQUIREMENTS AND ANY DEVIATIONS FROM THE DIMENSIONS SHOWN MUST BE SPECIFICALLY APPROVED. THE FINISHED CASTINGS SHALL BE OF UNIFORM QUALITY, FREE FROM BLOWHOLES, POROSITY, HARD SPOTS, SHRINKAGE DISTORTIONS OR OTHER DEFECTS.

CONSTRUCTION REQUIREMENTS AND MATERIALS FOR MASONRY WALLS SHALL CONFORM TO THE REQUIREMENTS OF THE STANDARD SPECIFICATIONS.

INLET FLOOR SHALL BE SHAPED WITH UNREINFORCED CONCRETE (8 SACK SAND MIX) TO CREATE FLOW CHANNELS AND TO INCREASE HYDRAULIC EFFICIENCY SUCH THAT THE INLET WILL BE SELF CLEANING BETWEEN ALL INLET AND/OR OUTLET PIPES.

AREA INLETS SHALL BE MEASURED AND PAID FOR AT THE CONTRACT UNIT PRICE BID PER EACH. THIS SHALL BE CONSIDERED FULL COMPENSATION FOR ALL EXCAVATION, BACKFILLING, MATERIALS, LABOR, CONNECTION TO EXISTING STRUCTURES (IF REQUIRED), EQUIPMENT, TOOLS, AND INCIDENTALS NECESSARY TO COMPLETE THE WORK.

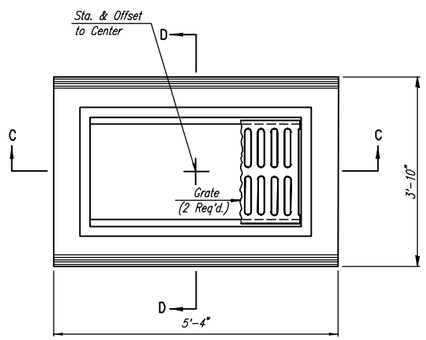

PLAN

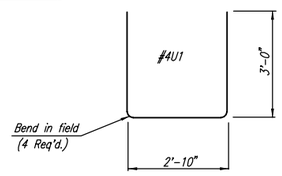

BENDING DIAGRAM

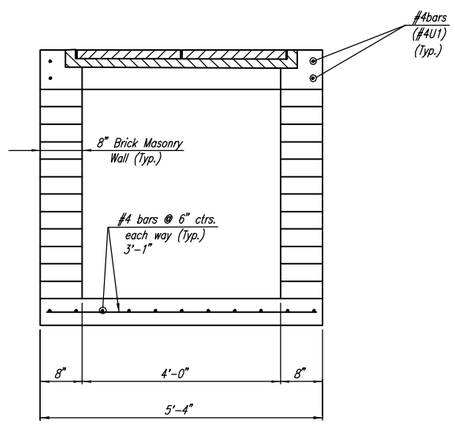

SECTION C-C

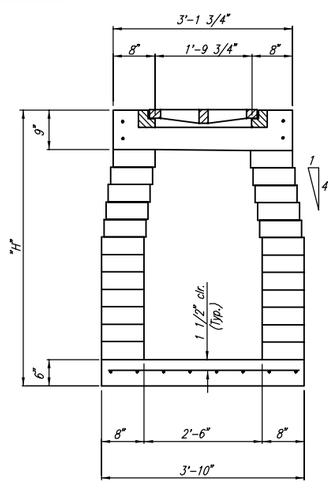

SECTION D-D

AREA INLET

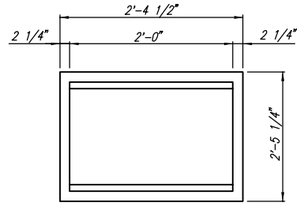

FRAME DETAIL
(Wt.=460 lbs.)

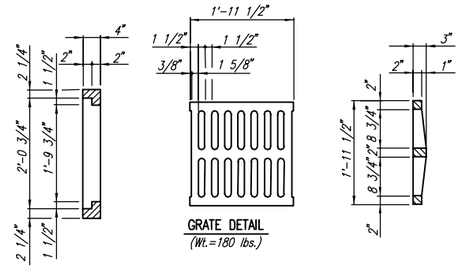

GRATE DETAIL
(Wt.=180 lbs.)

GENERAL NOTES

CONCRETE SHALL BE CITY STANDARD PAVING MIX. ALL EXPOSED EDGES SHALL BE FINISHED WITH AN APPROVED EDGING TOOL.

REINFORCING STEEL SHALL BE A MINIMUM GRADE 40, A.S.T.M. A615. ALL DIMENSIONS RELATIVE TO PLACEMENT OF REINFORCING ARE TO THE CENTERLINE OF BARS UNLESS OTHERWISE NOTED.

INLET CASTINGS SHALL BE MANUFACTURED USING GOOD QUALITY GRAY IRON CONFORMING TO CLASS 30 OF A.S.T.M. DESIGNATION A-48. DIMENSIONS AND WEIGHTS SHOWN ON THE DETAILED DRAWINGS SHALL BE CONSIDERED AS MINIMUM REQUIREMENTS AND ANY DEVIATIONS FROM THE DIMENSIONS SHOWN MUST BE SPECIFICALLY APPROVED. THE FINISHED CASTINGS SHALL BE OF UNIFORM QUALITY, FREE FROM BLOWHOLES, POROSITY, HARD SPOTS, SHRINKAGE DISTORTIONS OR OTHER DEFECTS.

CONSTRUCTION REQUIREMENTS AND MATERIALS FOR MASONRY WALLS SHALL CONFORM TO THE REQUIREMENTS OF THE STANDARD SPECIFICATIONS.

INLET FLOOR SHALL BE SHAPED WITH UNREINFORCED CONCRETE (8 SACK SAND MIX) TO CREATE FLOW CHANNELS AND TO INCREASE HYDRAULIC EFFICIENCY SUCH THAT THE INLET WILL BE SELF CLEANING BETWEEN ALL INLET AND/OR OUTLET PIPES.

AREA INLETS SHALL BE MEASURED AND PAID FOR AT THE CONTRACT UNIT PRICE BID PER EACH. THIS SHALL BE CONSIDERED FULL COMPENSATION FOR ALL EXCAVATION, BACKFILLING, MATERIALS, LABOR, CONNECTION TO EXISTING STRUCTURES (IF REQUIRED), EQUIPMENT, TOOLS, AND INCIDENTALS NECESSARY TO COMPLETE THE WORK.

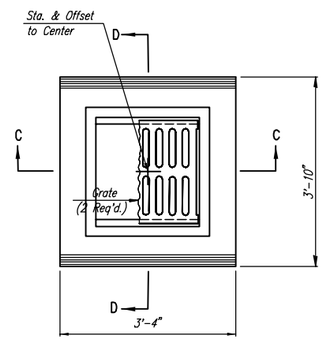

PLAN

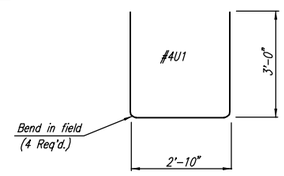

BENDING DIAGRAM

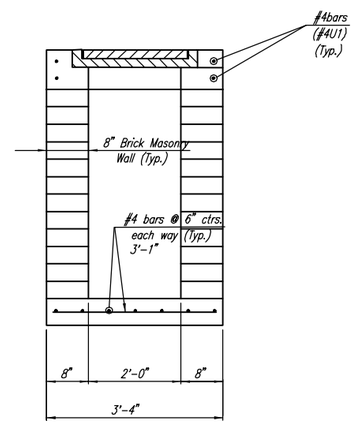

SECTION C-C

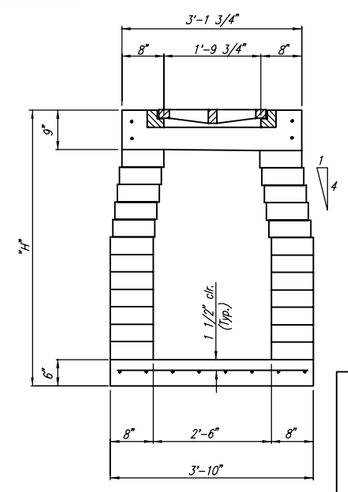

SECTION D-D

AREA INLET

No.	Revision	By	Date
	JANUARY 2008		

CITY OF VALLEY CENTER
SEDGWICK COUNTY, KANSAS

AREA INLET DETAILS

Professional Engineering Consultants, P.A.
303 S. TOPEKA • WICHITA, KANSAS 67202
316-262-2691 • FAX 316-262-3003

Designed by	PEC	Job No.	Sheet of
Drawn by	PEC	Date JULY 2002	

Saved 04-04-2008 6:29:56 AM by RFJ
Plot Scale 1:1 / 1:1434 04-04-2008 8:48:54 AM
P:\1998\98355\001\2008 Updates\Figure III-05 by: RFJ

FIGURE III-5

6"x12" W4xW4 WIRE FABRIC REINFORCING SHALL BE PLACED SUCH THAT THE WIRES WITH THE 6" SPACING WILL RUN PARALLEL WITH THE LONGITUDINAL JOINT.

SCALE: 1" = 10'

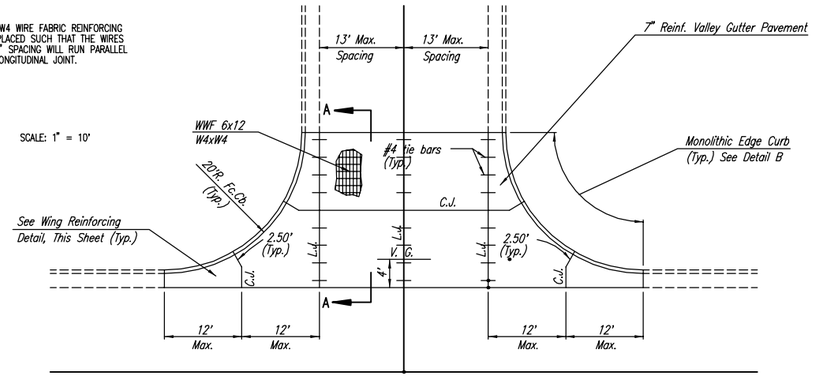

PLAN

REINFORCED VALLEY GUTTER

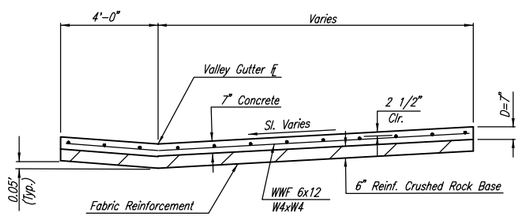

SECTION A-A

NOTE: OMIT REINFORCING MESH AT ALL JOINTS

NOTE: ALL CONCRETE VALLEY GUTTER REINFORCEMENT SHALL BE ADEQUATELY SUPPORTED BY BAR CHAIRS IN THE REQUIRED POSITION UNLESS APPROVED OTHERWISE BY THE ENGINEER.

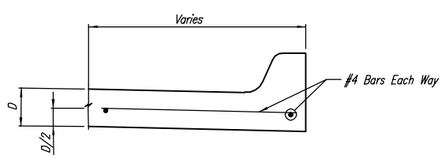

SECTION C-C

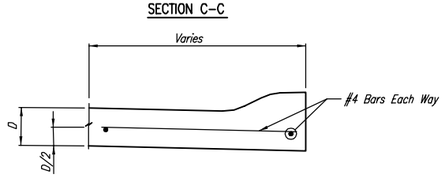

SECTION C-C

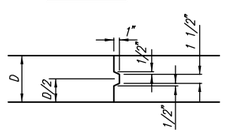

KEYWAY DETAIL

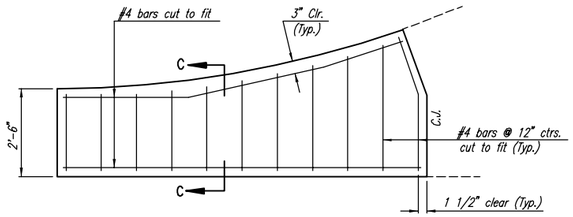

WING REINFORCING DETAIL

NOTE: OMIT WIRE FABRIC REINFORCING IN THIS SECTION.

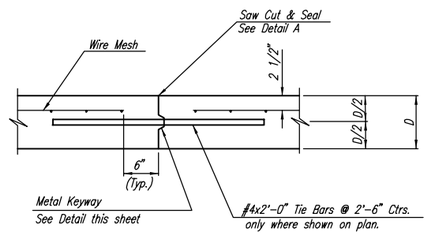

LONGITUDINAL CONSTRUCTION JOINT DETAIL
REINFORCED PAVEMENT
(TRANSVERSE SECTION)
(ALTERNATE L.J.)

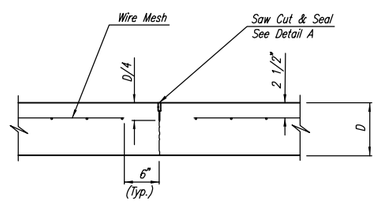

CONTRACTION JOINT DETAIL
REINFORCED PAVEMENT
(C.J.)

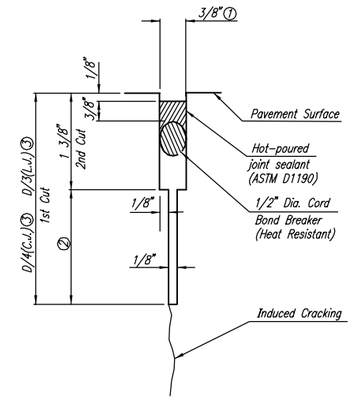

DETAIL A

① To be accomplished in 2 cuts for Longitudinal Joints and Contraction Joints. Initial cut to be 1/8" wide.

② Eliminate bottom of cut when metal keyway is used as part of Longitudinal or Transverse Construction Joint and at Doweled Construction Joint Locations.

③ 1 1/2" Minimum

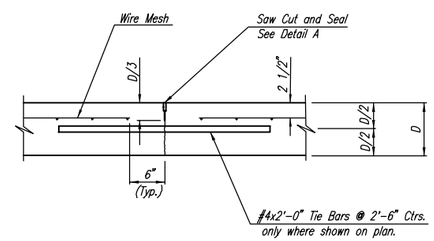

LONGITUDINAL JOINT DETAIL
REINFORCED PAVEMENT
(TRANSVERSE SECTION)
(L.J.)

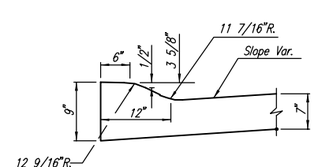

DETAIL B
(ROLL-TYPE CURB)

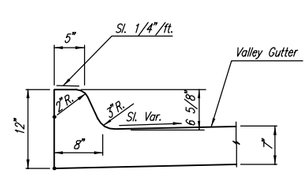

DETAIL B

No.	Revision	By	Date
	JANUARY 2008		

CITY OF VALLEY CENTER
SEDGWICK COUNTY, KANSAS

VALLEY GUTTER DETAILS

Professional Engineering Consultants, P.A.
303 S. TOPEKA • WICHITA, KANSAS 67202
316-262-2691 • FAX 316-262-3003

Designed by	PEC	Job No.	
Drawn by	PEC	Date	JULY 2002
Sheet	of		

Saved 04-04-2008 6:29:48 AM by REJ
Plot Scale 1:21.5013 04-04-2008 6:48:35 AM by: REJ
G:\1989\89355\001\2008 Updates\Figure III-06

SECTION IV. SANITARY SEWER DESIGN CRITERIA

A. General

Design of sanitary sewer systems shall meet the Minimum Standards of Design for Water Pollution Control Facilities as established by the Kansas Department of Health and Environment (KDHE) and shall also meet the requirements of the City of Valley Center.

Prior to submittal to KDHE, the designer shall provide the City with two sets of Office Copy plans for review and comment. Following Valley Center's review, the designer shall submit a sanitary sewer extension permit along with plans, specifications, and two extra plan and specification covers to KDHE and must obtain approval prior to the bid letting.

B. Sanitary Sewer Pipe Materials and Design

Approved pipe material for use on sanitary sewers shall include Ductile Iron Pipe and PVC pipe.

1. Flexible Gravity Sewer Pipe - Polyvinyl Chloride Pipe for use on gravity sanitary sewers will include the use of ASTM D-3034, SDR35 PVC Pipe for pipe 8" and larger. Pipe less than 8" shall be Schedule 40 PVC. Pipe joints shall be elastomeric seals meeting requirements of ASTM D-3 212.

2. Sanitary Sewer Pipe Slopes - Minimum pipe slopes for sanitary sewers shall be utilized to maintain a minimum velocity of 2 ft/s of the wastewater. Minimum pipe slopes are listed below:

Pipe Diameter (Inches)	Slope (%)
4	2.00
6	1.00
8	0.40
10	0.25
12	0.20
15	0.15
18	0.12

A slope of 0.3% may be used with 8" PVC Pipe with prior approval by the City.

3. Sanitary Sewer Capacity - Sanitary sewers shall be sized to carry the design flow when running 2/3 full for pipes 18" and smaller. Sanitary sewers shall be designed to carry all pre-existing flows plus additional capacity for peak future flows plus an allowance for infiltration. Calculated flows from future developments should include population density per

acre, with a projected domestic flow of 100 gallons per capita-day, with a minimum peaking factor of 3.

4. Testing - All sanitary sewers (gravity) shall be air tested to 4 psi. The pipe between manholes will be accepted if the maximum drop after 4 minutes for 8" pipe is less than I psi. (5 minutes - 10", 5.5 minutes - 12", 7.5 minutes - 15", and 8.5 minutes - 1811). Air testing for PVC sanitary sewers shall meet the requirements of Table 2 of ASTM F1417.

   All flexible sanitary sewers (gravity) shall be tested for deflection by pulling a mandrel through the pipe. Maximum deflection shall not exceed 5% of the internal diameter.

5. Video Inspection - All sanitary sewers 8" diameter and larger will be televised by the Contractor prior to acceptance. DVD and written report shall be provided to the City. All video inspections shall be performed with a representation of the City observing the inspection.

C. Trench and Backfill Requirements

Approved pipe bedding material includes UD-1 meeting KDOT Standard Specifications or ASTM C-33 Size No. 67 crushed rock (granular) material. Approved backfill material includes approved granular material (sand) free from debris, organic material and stones with 100% passing thru 3/4" sieve or compacted earth.

1. Trenching through Pavement - Pavement shall be saw cut in a neat line and replaced to a depth of 1 1/3 times the original pavement thickness. The replaced pavement shall be widened a minimum of 12" each way from the trench limits.

2. Backfilling Under Pavement - Pavement backfill material shall be excavatable flowable fill unless otherwise approved by the City. The material shall be backfilled from top of pipe bedding to 2' from the bottom of pavement.

3. Pipe Zone Backfilling - (See Figure IV-1). Class B bedding shall be used for flexible pipe. Class C bedding shall be used for rigid pipe. If wet conditions are encountered, Class B or C improved bedding shall be utilized.

D. Manholes - (See Figure IV-2)

Approved manholes for use with sanitary sewer construction shall be a minimum of 4 ft. inside diameter with 5" thick reinforced walls. Precast reinforced concrete manholes shall conform to the latest revision of ASTM C-478.

Manholes shall be provided with a minimum 8" thick precast base, constructed on an 8" thick crushed rock base. All pipe penetrations shall be provided with A-LOK gaskets for pipe connections to manholes. If a manhole is to be constructed over an existing pipe, a 12" reinforced cast in place base will be required, with the bottom section of the precast manhole extending into the base a minimum of 4". Any pipe connections to manholes that are not made with an A-LOK gasket shall be concrete encased a minimum of 3 feet from the manhole wall.

All manhole joints shall be sealed with 2 wraps of mastic or other approved gasket material.

1. Frame and Cover - Manhole frame and cover shall be Deeter No. 1261 meeting the requirements of ASTM A-48, Class 30.

2. Manhole Coatings - The interior of manholes shall be coated with 2 coats of Tnemec Series 66 Hi Build Epoxy or equal. The interior coating may be applied prior to shipment of precast sections. Exterior coating of manholes shall include I coat of Valsper Hi-Build Bituminous coating 35-J- 10, Tnemec 46-450 Heavy Tnemecol or equal.

3. Manhole Testing - All manholes shall be vacuum tested prior to backfill. Pipe penetrations shall be plugged and braced prior to vacuum testing. The completed manhole (stacked manhole including adjustment rings) with the exception of exterior coating and backfill shall be included in the test.

   The vacuum test will consist of creating a vacuum of 10 inches of mercury by pumping air out of the manhole. An approved test will consist of achieving less than I inch of Mercury drop in vacuum in a 2 minute time period.

E. Manhole and Sanitary Sewer Locations

Offset distances for sanitary sewer from property lines shall typically be 5'. Sanitary sewers shall typically be located on the south and west portions of utility easements. Manholes shall be provided in locations that will provide access for maintenance. Sanitary Sewers shall be extended across lots so manholes can be provided adjacent to platted street right-of-way. Manholes that may be susceptible to infiltration (i.e., ground water, ditches, etc.) shall include the use of an external joint wrap as approved by the City. The Owner will certify proper gr4ade for manhole lids, meters, and cleanouts. The builder will pay for any necessary manhole, meter, or cleanout adjustments.

F. Protection of Water Supplies

Sanitary sewers laid parallel to waterlines shall maintain a minimum horizontal distance of 10 feet between the sanitary sewer and waterlines. When a waterline and sanitary sewer cross and the sanitary sewer is 2 feet or more below the waterline, no special attention is needed. At all other crossings, the sanitary sewer shall be constructed of an approved pipe material with gasketed joints. One full-length pipe section shall be centered at the waterline crossing.

G. Easement Requirements

All sanitary sewers shall be constructed in easements. The minimum width of the easement is 20 feet, whether it is a utility easement or a sanitary sewer easement. Easement widths shall be evaluated based on depth of sewer and other items required to be included in the easement, such as backyard storm drains. The minimum width of easement that includes both sanitary sewers and drainage items shall be 30'. Easements shall be obtained for sanitary sewer construction. Access to manholes shall be evaluated and any additional required easements shall be obtained for maintenance purposes. Utility easements shall be graded as part of the sanitary sewer construction. The easement grades shall be established based on an approved drainage plan.

H. Sanitary Sewer Service Connections

Sanitary sewer service connections shall be provided for all lots that are to be serviced. Service connections will include either a 4" or 6" stub from a manhole, or an 8" x 4" or 8" x 6" saddle tee (see Figure IV-3). If a service connection is greater than 12' deep, (measured from proposed ground to flow line of the lateral) riser pipe shall be extended to 8' below proposed grade. Sewer services shall be located 1/3 of the distance through the lot on the downstream portion of the sewer.

I. Force Main Construction

Approved pipe material for use on sanitary sewer force mains will include Ductile Iron Pipe or PVC AWWA C900 pressure Class 100 (min.) pipe. Ductile Iron Pipe shall be thickness Class 52, cement lined and seal coated with an approved bituminous seal coat in accordance with AWWA C-104.

Force mains constructed inside structures, vaults, or manholes shall be flanged Ductile Iron pipe with an approved epoxy coating.

High points shall be minimized in the profile of sanitary sewer force mains. Provisions shall be made in the design to remove air from high points in the force main (see Figure IV-3).

J. Pump Stations

All pump stations shall include the use of three phase submersible pumps, unless otherwise approved by the City. Items that shall be included in all pump station designs are emergency generator (natural gas powered), 6' tall privacy fence, concrete pad, concrete access drive, pig port with valves, a separate check/plug valve vault hoist crane or other means of removing pumps, and stainless steel materials in the wet well.

1. Pump Sizing - Each pump shall be sized to accommodate peak flows from the service area. Detention times for the sewerage shall be determined for initial flows into the pump station. If the detention times warrant the use of smaller pumps, provisions shall be made to increase the capacity of the pumps by changing out the impellers and/or motors for future peak flows.

2. Wet Well - The wet well shall be sized to accommodate the peak flows from the service area. A precast manhole may be used as a wet well. The interior of the wet well shall be coated with Sauerisen or Raven coatings. Buoyancy of the wet well shall be calculated and additional thickness added to the wet well base as warranted. A screened vent pipe shall be included at the top of the wet well. Bottom of wet well invert shall be sloped at a 60' slope.

3. Controls – An ultrasonic transducer shall be provided for level control and pump operations. Float controls shall be furnished as a backup for alarm conditions. The levels shall be as follows:

   a) Low level "alarm"
   b) Low level "off'
   c) Low level "on"
   d) High level "on"
   e) High level "alarm"

   Alarm conditions shall be indicated through the use of emergency lights located at the pump station site, along with a telephone dialer.

K. Erosion Control and Sediment Barriers - (See Figure IV-4)

All projects shall include the use of Best Management Practices to provide erosion protection/pollution control. The use of silt fences, hay bales dams, and temporary/permanent seeding shall be incorporated into each project. In addition to the details as shown on Figure IV-4, the designer may need to incorporate other erosion control measures as detailed in Section I, or in accordance with the NPDES Stormwater discharge permit.

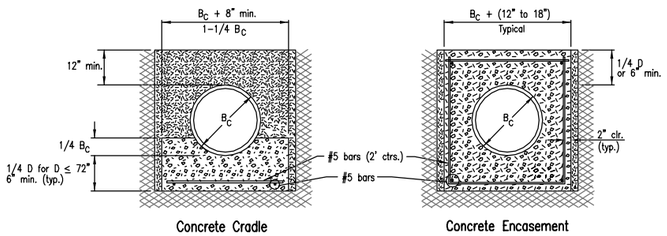

CLASS A

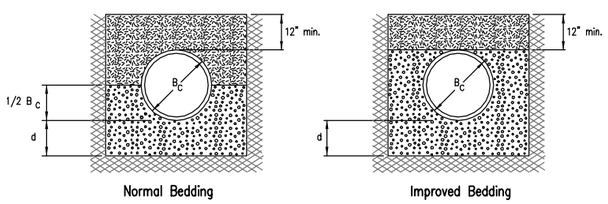

CLASS B

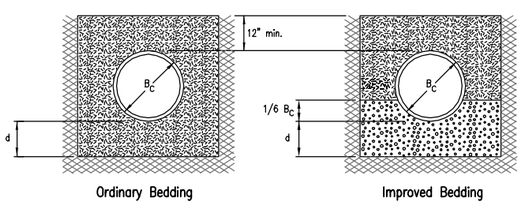

CLASS C

PIPE ZONE BACKFILLING

B_C = Outside Pipe Diameter

H = Backfill from Top of Pipe to Existing Ground

D = Inside Pipe Diameter

d = Depth of Bedding Material Below Pipe

= Granular Bedding Material or Sand-Gravel Bedding

= Compacted Embedment

= Concrete

Depth of Bedding Material Below Pipe		
D	d(min) Soil	d(min) Rock
27" & smaller	4"	6"
30" to 60"	5"	9"
66" & larger	6"	12"

Granular Bedding Material shall be an approved material consisting of durable crushed rock conforming with the requirements of the latest revision of ASTM C-33 Size No. 67 (3/4" to No. 4); to be placed in not more than 6" layers and compacted by slicing with a shovel or vibrating. Soundness, abrasion, and absorption limits shall be as required for coarse aggregates in Section 03010-Concrete Work in the specifications.

Sand-Gravel Bedding Material – sand-gravel mix meeting Type UD-1 of the 1990 Kansas Standard Specifications for State Road and Bridge Construction.

Compacted Embedment shall be an approved sand material free from debris, organic material, and stones with 100% passing the 3/4" sieve to be placed in uniform layers not more than 6" thick and compacted to 95 percent maximum density as determined by ASTM D698. Granular Bedding Material may be substituted for all or part of Compacted Embedment Materials.

Class A "Concrete Cradle" and/or Class A "Concrete Encasement" is not required unless specified on the plans. However, where unexpected trench conditions exist or improper trenching is performed Class A Bedding may be required as determined by the Engineer.

Class B Bedding shall be used for all flexible pipe.

a. Class B Normal Bedding shall be used for PVC Pipe unless wet conditions are encountered.

b. Class B Improved Bedding shall be used for other flexible pipe, and for PVC pipe in wet conditions.

Class C Bedding shall be used for all rigid pipe.

a. Class C Ordinary Bedding shall be used for all rigid pipe unless wet conditions are encountered.

b. Class C Improved Bedding shall be used for wet conditions existing in the trench, as directed by the Engineer, at no additional cost to the Owner. The dimensions shall be equal to that required for "rock" excavation (see specifications).

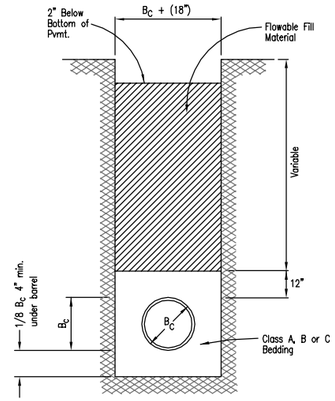

BACKFILL – FLOWABLE FILL

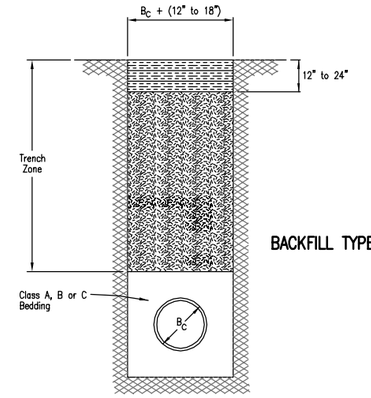

BACKFILL TYPE I

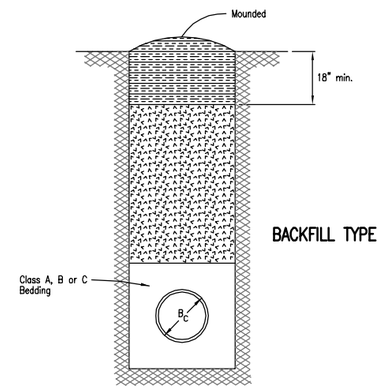

BACKFILL TYPE II

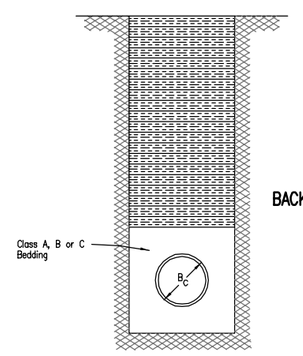

BACKFILL TYPE III

TRENCH ZONE BACKFILLING

B_C = Outside Pipe Diameter

= Compacted Granular Backfill

= Uncompacted Earth Backfill

= Compacted Earth Backfill

Compacted Granular Backfill material shall be an approved sand material free from debris, organic material and stones with 100% passing the 3/4" sieve and not more than 15% passing a No. 200 sieve; to be jetted and mechanically vibrated into place and compacted to 95% density as determined by ASTM D698.

Uncompacted Earth Backfill material may be natural soil free from large clods or stones, brush, roots more than 2 inches in diameter, debris, and junk. Flooding with water shall be provided as directed by the Engineer.

Compacted Earth Backfill shall consist of material existing prior to trenching or selected material as directed by the Engineer, and shall be compacted to 90% density as determined by ASTM D698.

Backfill: Backfill material and compaction requirements shall conform to either Type I, Type II or Type III as specified in the plans. One years maintenance will be required on all backfill.

Backfilling Through Rock: Backfilling through rock shall be performed as specified in the paragraph Backfill above, except that the Pipe Zone is increased to provide eighteen (18) inches of cover over the pipe. When approved by the Engineer the remainder of the backfill may be excavated rock provided the excavated rock has been broken up so that earth and rock will thoroughly mix and not result in voids around the larger pieces of rock. Any excess rock remaining after the trench has been backfilled shall be removed or wasted as directed by the Engineer.

Backfilling Under Pavement: Backfilling under existing or proposed pavement shall be performed as Backfill Type I to a level of two (2) feet from the bottom of the pavement. The remainder of the trench shall be backfilled with selected material, sufficiently damp to be properly compacted in layers not exceeding six (6) inches in depth, compaction shall be performed with mechanical tampers and continued until a relative density of 100 percent of standard density, in conformance with ASTM D698 is attained.

Backfilling Under Gravel Streets: Where the trench crosses or is in existing gravel surfaced streets, the backfill shall be compacted as provided in the paragraph "Backfilling Under Pavement".

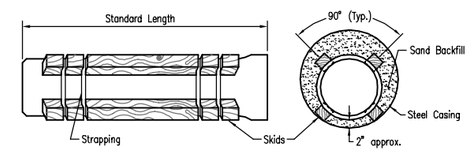

STEEL ENCASEMENT DETAIL
PIPE MAIN 12" AND UNDER

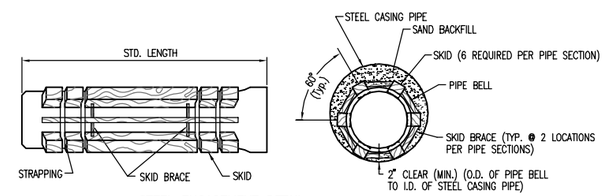

STEEL ENCASEMENT DETAIL
PIPE MAIN OVER 12"

No.	Revision	By	Date
	JANUARY 2008		

CITY OF VALLEY CENTER
SEDGWICK COUNTY, KANSAS

BEDDING AND BACKFILL DETAILS

Professional Engineering Consultants, P.A.
303 S. TOPEKA • WICHITA, KANSAS 67202
316-262-2691 • FAX 316-262-3003

Designed by	PEC	Job No.	Sheet of
Drawn by	PEC	Date JULY 2002	

FIGURE IV-1

Saved 04-07-2008 7:23:50 AM by RCJ
Plot Scale 1:1 Date 04-07-2008 7:39:57 AM
G:\1990\93550\001\2008 Updates\Figure IV-01 by: RCJ

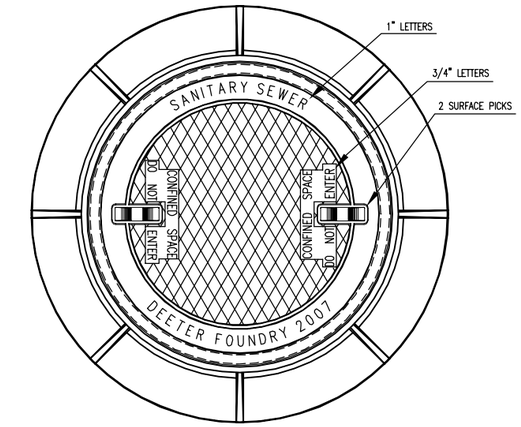

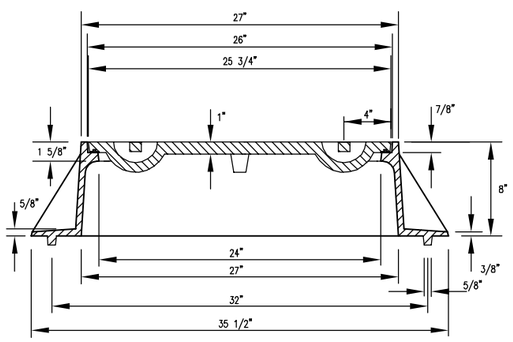

MANHOLE FRAME AND COVER

(FRAME WEIGHT = 180 LBS.)
(COVER WEIGHT = 125 LBS.)

MANHOLE FRAME AND COVER NOTES

1. CAST IRON MANHOLE FRAME AND COVER SHALL CONFORM TO ASTM A-48, CLASS 35B, OR BETTER.
2. CASTINGS ARE TO BE MANUFACTURED TRUE TO PATTERN AND WITH SATISFACTORY FIT OF COMPONENT PARTS. CASTINGS SHALL BE FREE OF DEFECTS AND ALL BURRS SHALL BE GROUND SMOOTH. DIMENSIONS AS DETAILED ON PLAN SHALL NOT DEVIATE BY +\- 1/16" PER FOOT.
3. NO OTHER LETTERING OR MARKINGS OTHER THAN THOSE DETAILED ON PLAN WILL BE PERMITTED ON CASTINGS.
4. CASTINGS MUST BE DOMESTICALLY MANUFACTURED IN THE UNITED STATES OF AMERICA.
5. THE FRAMES AND COVERS SHALL BE FURNISHED WITH MACHINED HORIZONTAL BEARING SURFACES SO FITTING PARTS WILL NOT RATTLE OR ROCK UNDER TRAFFIC.
6. MANHOLE CASTINGS SHALL BE SELF-SEALING DEETER FOUNDRY INC. NO. 1261 OR APPROVED EQUAL, UNLESS OTHERWISE SPECIFIED IN THE SPECIAL CONDITIONS. (MINIMUM WT. = 305 LBS.) ALL MANHOLE CASTINGS SHALL BE CONSIDERED SUBSIDIARY TO THE UNIT PRICES BID FOR THE VARIOUS MANHOLE TYPES.
7. THE MANUFACTURER SHALL SUBMIT SHOP DRAWINGS TO THE ENGINEER FOR APPROVAL PRIOR TO MANUFACTURE. THE ENGINEER SHALL RETAIN THE RIGHT TO REJECT CASTINGS NOT CONFORMING TO THE SPECIFICATIONS OR THE APPROVED SHOP DRAWINGS.
8. THE MANHOLE FRAME SHALL BE FURNISHED WITH AN APPROVED CONTINUOUS T-GASKET GROOVED INTO THE BEARING SURFACE OF THE MANHOLE COVER. THE T-GASKET SHALL BE FACTORY INSTALLED IN THE MANHOLE COVER WITH 100% SILICON SEALANT-DOW CORNING OR EQUAL.

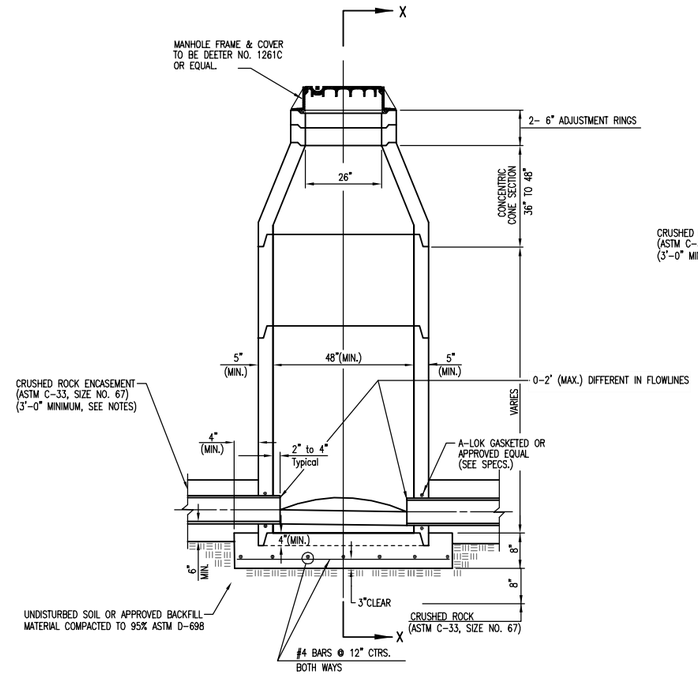

PRECAST STANDARD MANHOLE

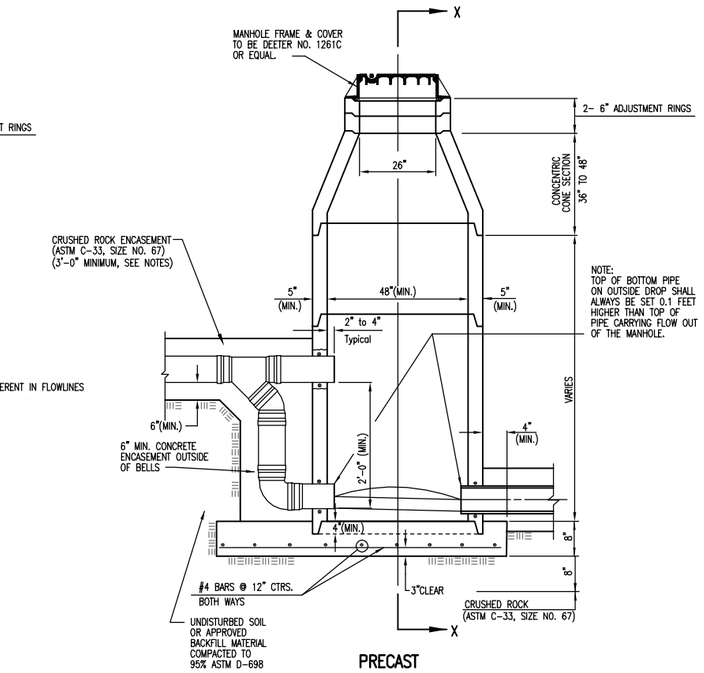

PRECAST OUTSIDE DROP MANHOLE

PRECAST MANHOLE NOTES

1. IF, IN THE OPINION OF THE ENGINEER, THE MANHOLE SUBGRADE APPEARS UNSTABLE, THE CONTRACTOR WILL HAVE THE OPTION TO COMPACT SUBGRADE AS SHOWN OR INCREASE THE THICKNESS OF THE MANHOLE BASE AS DIRECTED BY THE ENGINEER.
2. STEEL REINFORCING WILL BE REQUIRED IN ALL MANHOLE BASES.
3. DOG HOUSE MANHOLES MAY BE USED WHERE CONNECTING TO EXISTING SEWERS. APPROVED FLEXIBLE WATERSTOP GASKETS WHICH MEET OR EXCEED THE TEST REQUIREMENTS OF ASTM C-923 SHALL BE INSTALLED TO JOIN THE SEWER TO THE MANHOLE WALL WHEN PLASTIC PIPE IS USED. SEWER PIPE EXTENDING FROM MANHOLES SHALL BE SUPPORTED WITH CRUSHED ROCK ENCASEMENT A MINIMUM OF 3 FEET FROM THE MANHOLE WALL, WHEN A-LOK GASKETS ARE NOT PROVIDED FOR THE PIPE PENETRATION TO THE MANHOLE.
4. THE MANHOLE FRAME SHALL BE SEATED ON AN APPROVED BUTYL-RUBBER SEALANT TO PROVIDE A WATER-TIGHT SEAL BETWEEN THE MANHOLE ADJUSTMENT RING AND THE MANHOLE FRAME.
5. GASKETED PIPE PLUGS AND CAPS SHALL BE PROVIDED BY THE PIPE SUPPLIER.
6. ALL MANHOLE CONSTRUCTION SHALL BE WATER TIGHT.
7. TOP OF MANHOLE FLOOR SLAB SHALL BE AT LEAST 3 INCHES BELOW THE FLOW LINE OF THE OUTLET PIPE TO INSURE SUFFICIENT MINIMUM THICKNESS OF SHAPED INVERT.
8. ALL PRECAST CONCRETE MANHOLE SECTIONS SHALL CONFORM TO THE LATEST REVISION OF ASTM C-478 AS MODIFIED BY THE SPECIFICATIONS.
9. CONCRETE FOR MANHOLE BASES SHALL BE CLASS I AS DESCRIBED IN THE SPECIFICATIONS.
10. PRECAST MANHOLES SHALL BE SET AT LEAST 4 INCHES INTO MANHOLE BASE. CAST IN PLACE BASES SHALL BE 8" THICK (MIN.) WITH #4 BARS @ 12" CENTERS.
11. MANHOLES WITH PIPE SIZES 24" AND LARGER SHALL HAVE 5 FOOT INSIDE DIAMETER (MIN.)
12. INSIDE DIAMETER OF FIVE-FOOT DIAMETER PRECAST MANHOLES SHALL REMAIN CONSTANT TO THE LOCATION OF THE REDUCING FLAT TOP WHICH CONNECTS THE FOUR-FOOT DIAMETER CONE SECTION TO THE FIVE FOOT DIAMETER MANHOLE BARREL.
13. ALL INTERIOR CONCRETE SURFACES ABOVE THE BENCH OF PRECAST MANHOLES SHALL BE COATED WITH 2 COATS OF TNEMEC SERIES 66 HI-BUILD EPOXOLINE, DRY THICKNESS OF 8 MILS. (MIN.) UNLESS OTHERWISE SPECIFIED.
14. EXTERIOR MANHOLE WALLS SHALL BE COATED WITH 1 COAT VALSPAR HI-BUILD BITUMINOUS COATING 35-J-10, OR TNEMEC 46-450 HEAVY TNEMECOL, OR APPROVED EQUAL.
15. MANHOLES WITH PRECAST BASES MAY BE USED AT THE CONTRACTORS OPTION. MANHOLES WITH PRECAST BASES SHALL HAVE A-LOK OR APPROVED EQUAL GASKETS CAST INTO THE MANHOLE WALL FOR ALL PIPE PENETRATIONS. THESE MANHOLES SHALL HAVE AN 8" MINIMUM BASE THICKNESS AND SHALL BE PLACED ON AN 8" MIN. CRUSHED ROCK BASE. PIPES SHALL BE ENCASED WITH CRUSHED ROCK TO AT LEAST 3 FEET FROM THE MANHOLE WALL. CRUSHED ROCK SHALL MEET THE REQUIREMENTS FOR GRANULAR BEDDING MATERIAL.
16. MANHOLE SECTIONS SHALL BE SUPPLIED WITH RECESSED LIFTING EYES. LIFTING EYE RECESSES SHALL BE GROUTED FLUSH TO THE MANHOLE WALL WITH HYDRAULIC CEMENT AFTER THE MANHOLE IS IN PLACE. LIFTING HOLES THRU THE MANHOLE WALL WILL NOT BE ACCEPTED.

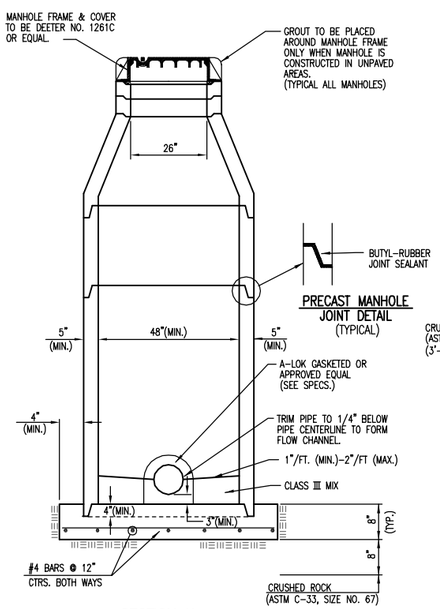

SECTION X (TYPICAL)

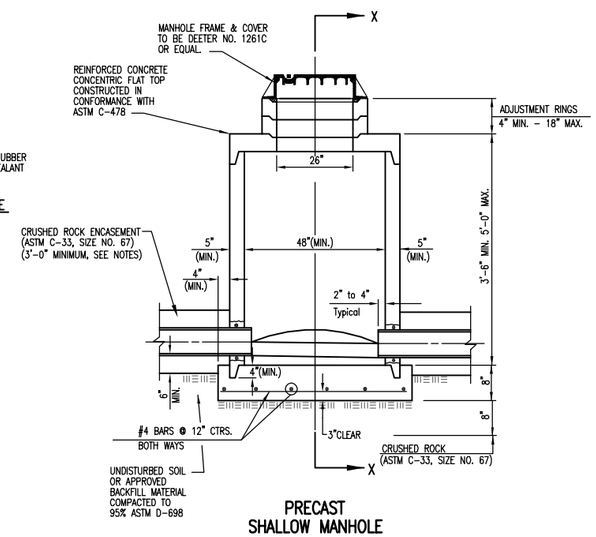

PRECAST SHALLOW MANHOLE

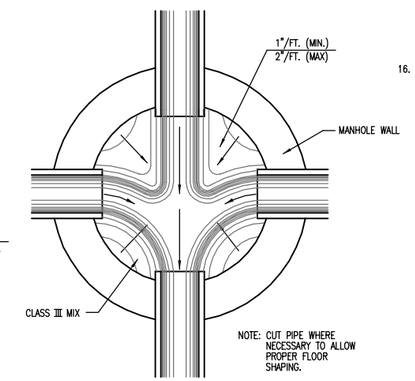

TYPICAL MANHOLE FLOOR SHAPING

No.	Revision	By	Date
	JANUARY 2008		

CITY OF VALLEY CENTER
SEDGWICK COUNTY, KANSAS

PRECAST MANHOLE DETAILS

Professional Engineering Consultants, P.A.
303 S. TOPEKA • WICHITA, KANSAS 67202
316-262-2691 • FAX 316-262-3003

Designed by	PEC	Job No.	Sheet of
Drawn by	PEC	Date JULY 2002	

Saved 04-04-2008 8:29:22 AM by REJ
File: 1261-SDM.dwg 04-04-2008 8:47:30 AM by REJ
O:\1999\99555\DWG\DOOR Upgrades\Upgrade 1v02

FIGURE IV-2

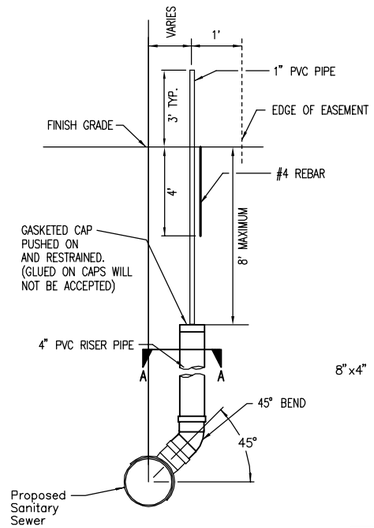

SERVICE CONNECTION TYPE 1

* CRUSHED ROCK SHALL MEET THE REQUIREMENTS FOR GRANULAR BEDDING MATERIAL, AS OUTLINED IN THE SPECIFICATIONS.

SERVICE CONNECTIONS TYPE 1 ARE TO BE INSTALLED WHERE PROPOSED SEWER MAIN IS 12' OR MORE BELOW PROPOSED GROUND OR AS SHOWN IN THE PLANS.

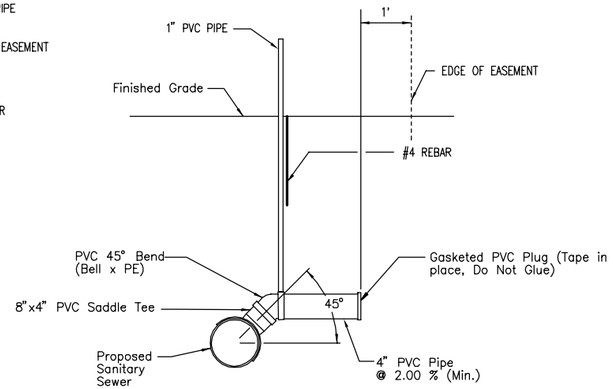

SERVICE CONNECTION TYPE 2

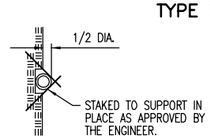

SECTION A–A

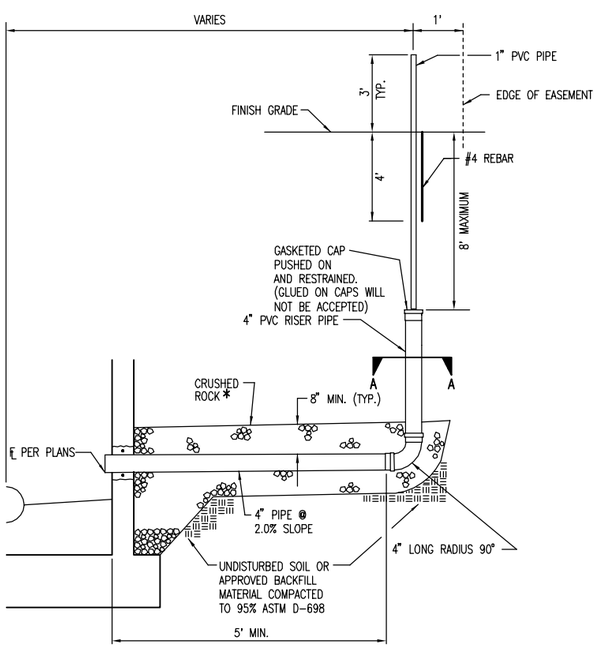

MH SERVICE CONNECTION TYPE 1

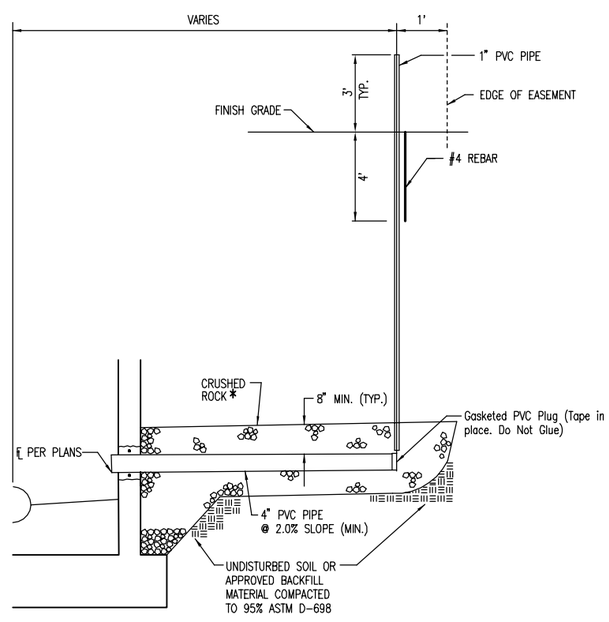

MH SERVICE CONNECTION TYPE 2

SEWER SERVICE TABLE

LOCATION						FOR INFORMATION ONLY	RECORD INFORMATION (TO BE COMPLETED BY PROJECT INSPECTOR)		
NO.	TYPE	LOT	BLOCK	LINE	STATION/ DIRECTION	APPROXIMATE LENGTH 4" PIPE	DISTANCE FROM NEAREST MANHOLE UPSTREAM	DISTANCE FROM NEAREST MANHOLE DOWNSTREAM	NO.
1	–	–	–	–	–	–			1
2									2
3									3
4									4
5									5
6									6
7									7
8									8
9									9
10									10
11									11
12									12
13									13
14									14
15									15
16									16
17									17
18									18
19									19
20									20
21									21
22									22
23									23
24									24
25									25
26									26
27									27
28									28
29									29
30									30
31									31
32									32
33									33
34									34
35									35
36									36
37									37
38									38
39									39
40									40
41									41
42									42
43									43
44									44
45									45
46									46
47									47
48									48
49									49
50									50
51									51
52									52

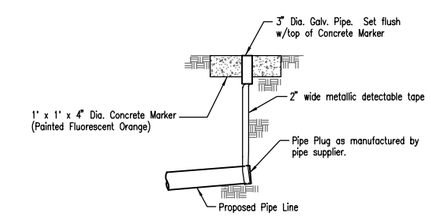

BURIED PIPE PLUG & MARKER DETAIL

(PLUGGING & STAKING SHALL BE SUBSIDIARY TO THE LUMP SUM PRICE BID FOR SITE RESTORATION)

No.	Revision	By	Date
	JANUARY 2008		

CITY OF VALLEY CENTER
SEDGWICK COUNTY, KANSAS

SANITARY SEWER DETAILS

Professional Engineering Consultants, P.A.
303 S. TOPEKA • WICHITA, KANSAS 67202
316-262-2691 • FAX 316-262-3003

Designed by	PEC	Job No.	
Drawn by	PEC	Date	JULY 2002

Sheet of

Saved 04-04-2008 6:29:12 AM by REJ
Plot Scale 1:2.1508 04-04-2008 6:47:09 AM by REJ
Q:\1989\98455\001\2000 Updates\Figure 11-03

FIGURE IV-3

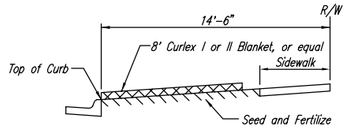

SECTION B-B

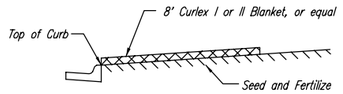

SECTION A-A

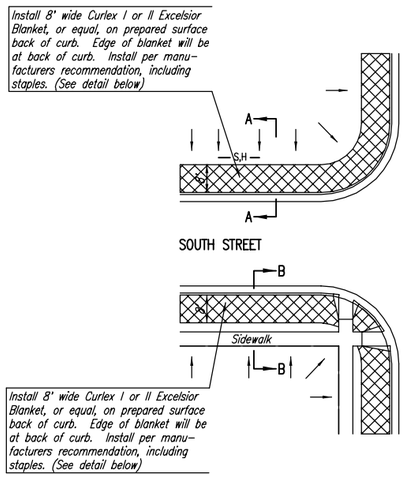

NOTES:

1. EXCELSIOR MAT TO BE INSTALLED WHEN SOD IS NOT SPECIFIED ON PROJECT.
2. EXCELSIOR BLANKET TO BE INSTALLED OVER SEED AND FERTILIZER,
3. AFTER INSTALLATION OF EXCELSIOR BLANKET, AT LOCATIONS WHERE CONCENTRATED FLOW CARRIES SEDIMENT OVER THE CURB AND INTO THE GUTTER, SUPPLEMENTAL EROSION CONTROL DEVICES WILL BE INSTALLED BY THE CONTRACTOR AS REQUIRED.

BACK OF CURB PROTECTION DETAIL

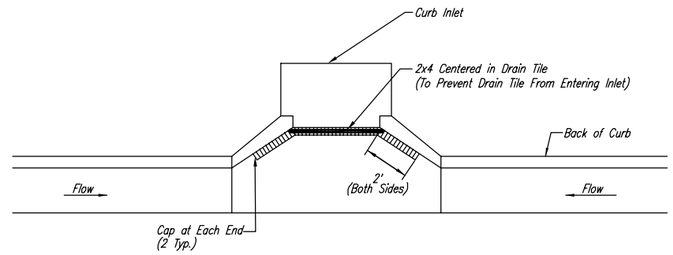

Note:
Place 4" perforated PVC pipe, filled with 1/2"-1" dia. gravel, in front of curb inlet as shown.

2X4 LENGTH	INLET TYPE	INLET OPENING
5'-6"	1-A	5'-0"
10'-6"	1-A	10'-0"
15'-6"	1-A	15'-0"

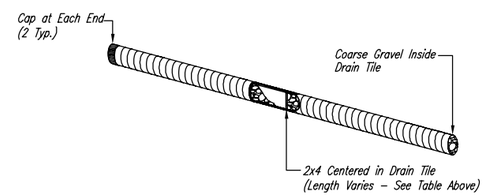

CURB INLET PROTECTION

4" PERFORATED PIPE W/ GRAVEL

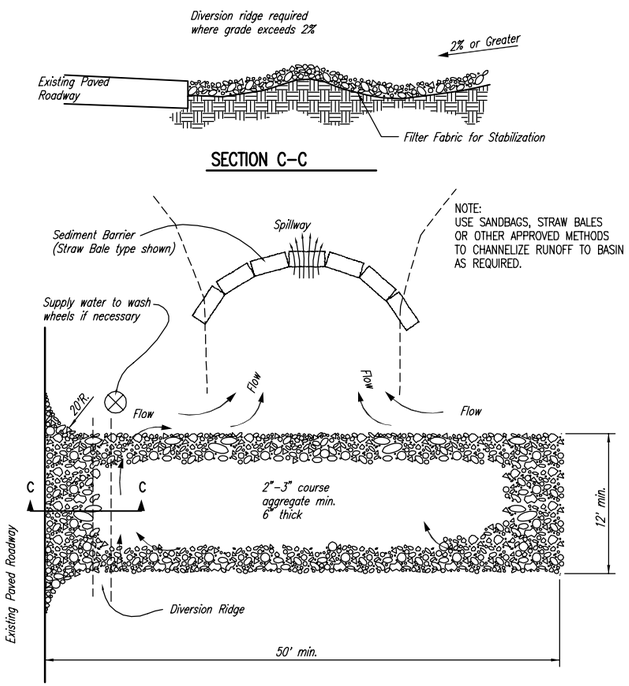

STABILIZED CONSTRUCTION ENTRANCE

NOTES:

1. THE ENTRANCE SHALL BE MAINTAINED IN A CONDITION THAT WILL PREVENT TRACKING OR FLOWING OF SEDIMENT ONTO PUBLIC RIGHTS-OF-WAY. THIS MAY REQUIRE TOP DRESSING, REPAIR AND/OR CLEANOUT OF ANY MEASURES USED TO TRAP SEDIMENT.
2. WHEN NECESSARY, WHEELS SHALL BE CLEANED PRIOR TO ENTRANCE ONTO PUBLIC RIGHT-OF-WAY.
3. WHEN WASHING IS REQUIRED, IT SHALL BE DONE ON AN AREA STABILIZED WITH CRUSHED STONE THAT DRAINS INTO AN APPROVED SEDIMENT TRAP OR SEDIMENT BASIN, AS SHOWN ABOVE.
4. DRIVE ENTRANCES ONTO RESIDENTIAL LOTS WILL NOT BE REQUIRED TO HAVE THE SEDIMENT BARRIER SHOWN, BUT WHEEL WASHING MAY BE REQUIRED IF STABILIZED ENTRANCE IS NOT SUFFICIENT TO KEEP MUD FROM BEING TRACKED ONTO ADJACENT STREET. ENTRANCE SHALL EXTEND FROM BACK OF CURB TO DWELLING.

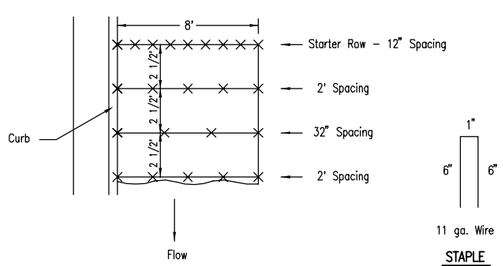

STAPLE PATTERN

STAPLE

NOTES: Use 6" seam overlap

DETAILS FOR CURLEX I OR II BLANKETS

No.	Revision	By	Date
	JANUARY 2008		

CITY OF VALLEY CENTER
SEDGWICK COUNTY, KANSAS

BACK OF CURB PROTECTION, CURB INLET PROTECTION AND CONSTRUCTION ENTRANCE

Professional Engineering Consultants, P.A.
203 S. TOPEKA • WICHITA, KANSAS 67202
316-262-2691 • FAX 316-262-3003

Designed by	PEC	Job No.	Sheet of
Drawn by	PEC	Date JULY 2002	

Saved 04-04-2008 6:29:04 AM by JEJ
Plot Scale 1:1 Plot Date 04-04-2008 6:46:47 AM by JEJ
D:\1989\89355\DWG\2008 Updates\Figure 4-14

FIGURE IV-4

NOTE: Point A must be higher than Point B so that water flows over the silt fence fabric and not around it.

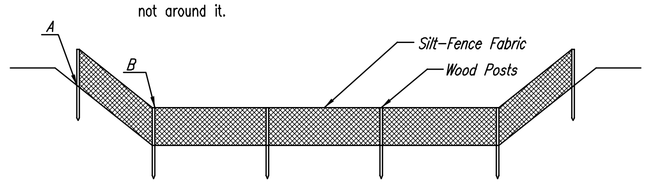

ELEVATION

SILT FENCE DITCH CHECKS
(STREAM PROTECTION)

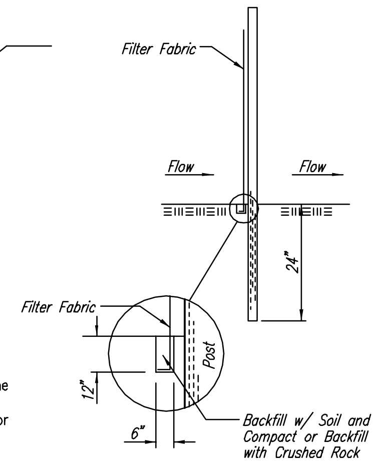

ANCHOR TRENCH DETAIL

Material Specification:

Silt fence fabric should conform to the AASHTO M288 96 silt fence specification.
The posts used to support the silt fence fabric should be a hardwood material with the following minimum dimensions: 2" square (nominal) by 4' long.
Silt fence fabric should be attached to the wooden posts with staples, wire, zip ties, or nails.

Placement:

Place silt fence in ditches where it is unlikely that it will be overtopped.
Water should flow through a silt fence ditch check, not over it. Silt fence ditch checks often fail when overtopped.
Silt fence ditch checks should be placed perpendicular to the flowline of the ditch.
The silt fence should extend far enough so that the ground level at the ends of the fence is higher than the top of the low point of the fence. This prevents water from flowing around the check.
Silt fence ditch checks should not be placed in ditches where high flows are expected. Rock checks should be used instead.
Silt fence should be placed in ditches with slopes of 6% or less. For slopes steeper than 6%, rock checks should be used.

The following table provides check spacing for a given ditch grade:

Ditch Check Ditch grade (%)	Spacing Check Spacing (feet)
0.5	200
1.0	200
2.0	100
3.0	65
4.0	50
5.0	40
6.0	30

Proper installation method:

Excavate a trench perpendicular to the ditch flowline that is at least 12" deep by 6" wide.
Extend the trench in a straight line along the entire length of the proposed ditch check.
Place the soil on the upstream side of the trench for later use.
Roll out a continuous length of silt fence fabric on the downstream side of the trench.
Place the edge of the fabric in the trench starting at the top upstream edge of the trench.
Line two sides of the trench with the fabric as shown on detail. Backfill over the fabric in the trench with the excavated soil and compact. After filling the trench, approximately 24" to 36" of silt fence fabric should remain exposed.
Lay the exposed silt fence on the upstream side of the trench to clear an area for driving in the posts. Just downstream of the trench, drive posts into the ground to a depth of at least 24". Place posts no more than 4' apart.
Attach the silt fence to the anchored post with staples, wire, zip ties, or nails.

List of common placement/installation mistakes to avoid:

Water should flow through a silt fence ditch check–not over it. Place silt fence in ditches where it is unlikely that it will be overtopped. Silt fence installations quickly deteriorate when water overtops them.
Do not place silt fence posts on the upstream side of the silt fence fabric. In this configuration, the force of the water is not restricted by the posts, but only by the staples (wire, zip ties, nails, etc.). The silt fence will rip and fail.
Do not place a silt fence ditch check directly in front of a culvert outlet. It will not stand up to the concentrated flow.
Do not place silt fence ditch checks in ditches that will likely experience high flows. They will not stand up to concentrated flow.
Follow prescribed ditch check spacing guidelines. If spacing guidelines are exceeded, erosion will occur between the ditch checks.
Do not allow water to flow around the ditch check. Make sure that the ditch check is long enough so that the ground level at the ends of the fence is higher than the low point on the top of the fence.
Do not place silt fence ditch checks in channels with shallow soils underlain by rock. If the check is not anchored sufficiently, it will wash out.

Inspection and Maintenance:

Silt fence ditch checks should be inspected every 7 days and within 24 hours of a rainfall of 1/2" or more. The following is a list of questions that should be addressed during each inspection:

Does water flow around the ditch check?
Does water flow under the ditch check?
Does the silt fence sag excessively?
Has the silt fence torn or become detached from the posts?
Does sediment need to be removed from behind the ditch check?

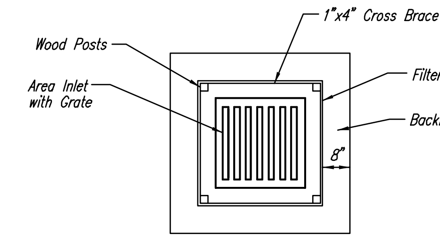

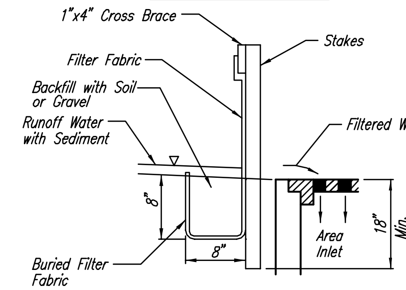

SILT FENCE BARRIERS FOR AREA INLETS
(INLET PROTECTION)

Material Specification:

Silt fence fabric should conform to the AASHTO M288 96 silt fence specification.
The posts used to support the silt fence fabric should be a hardwood material with the following minimum dimensions: 2" square (nominal) by 4' long.
The material used to frame the tops of the posts should be 1" by 4" boards.
Silt fence fabric should be attached to the wooden posts and frame with staples, wire, zip ties, or nails.

Placement:

Place a silt fence drop inlet barrier in a location where it is unlikely to be overtopped.
Water should flow through silt fence, not over it. Silt fence barriers for area inlets often fail when repeatedly overtopped.
When used as a barrier for area inlets, silt fence fabric and posts must be supported at the top by a wooden frame.
When a silt fence barrier for area inlets is located near an inlet that has steep approach slopes, the storage capacity behind the barrier is drastically reduced. Timely removal of sediment must occur for a barrier to operate properly in this location.

Proper installation method:

Excavate a trench around the perimeter of the area inlet that is at least 8" deep by 8" wide.
Drive posts to a depth of at least 18" around the perimeter of the area inlet.
The distance between posts should be 4' or less. If the distance between two adjacent corner posts is more than 4', add another post(s) between them.
Connect the tops of all the posts with a wooden frame made of 1" by 4" boards. Use nails or screws for fastening.
Roll out a continuous length of silt fence fabric long enough to wrap around the perimeter of the area inlet. Add more length for overlapping the fabric joint. Place the edge of the fabric in the trench, starting at the outside edge of the trench. Line all three sides of the trench with the fabric. Backfill over the fabric in the trench with the excavated soil and compact. After filling the trench, approximately 24" to 36" of silt fence fabric should remain exposed.
Attach the silt fence to the outside of the post/frame structure with staples, wire, zip ties, or nails. The joint should be overlapped to the next post.

Note: When a silt fence barrier for area inlet is placed in a shallow median ditch, make sure that the top of the barrier is not higher than the paved road. In this configuration, water may spread onto the roadway causing a hazardous condition.

List of common placement/installation mistakes to avoid:

Water should flow through a silt fence barrier for area inlet–not over it. Place a silt fence barrier for area inlet in a location where it is unlikely to be overtopped. Silt fence barrier for area inlets often fail when repeatedly overtopped.
Do not place posts on the outside of the silt fence barrier for area inlet. In this configuration, the force of the water is not resisted by the posts, but only by the staples (wire, zip ties, nails, etc.). The silt fence will rip and fail.
Do not install silt fence barrier for area inlets without framing the top of the posts.
The corner posts around area inlets are stressed in two directions whereas a normal silt fence is only stressed in one direction. This added stress requires more support.

Inspection and Maintenance:

Silt fence barrier for area inlets should be inspected every 7 days and within 24 hours of a rainfall of 1/2" or more. The following is a list of questions that should be addressed during each inspection:

Does water flow under the silt fence?
Does the silt fence sag excessively?
Has the silt fence torn or become detached from the posts?
Does sediment need to be removed from behind the area inlet barrier?

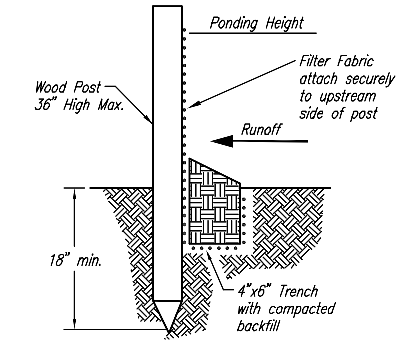

SILT FENCE BARRIERS

Material Specification:

Silt fence fabric should conform to the AASHTO M288 96 silt fence specification.
The posts used to support the silt fence fabric should be a hardwood material with the following minimum dimensions: 2" square (nominal) by 4' long.
Silt fence fabric should be attached to the wooden posts with staples, wire, zip ties, or nails.

Placement:

A slope barrier should be used at the toe of a slope when a ditch does not exist. The slope barrier should be placed on nearly level ground 5' to 10' away from the toe of a slope. The barrier is placed away from the toe of the slope to provide adequate storage for settling out sediment.
When practicable, silt fence slope barriers should be placed along contours to avoid a concentration of flow.
Silt fence slope barriers can also be placed along right-of-way fence lines to keep sediment from crossing onto adjacent property. When placed in this manner, the slope barrier will not likely follow contours.

Proper installation method:

Excavate a trench the length of the planned slope barrier that is 6" deep by 4" wide.
Make sure that the trench is excavated along a single contour. When practicable, slope barriers should be placed along contours to avoid a concentration of flow. Place the soil on the upslope side of the trench for later use.
Roll out a continuous length of silt fence fabric on the downslope side of the trench.
Place the edge of the fabric in the trench starting at the top upslope edge. Line all three sides of the trench with the fabric. Backfill over the fabric in the trench with the excavated soil and compact. After filling the trench, approximately 24" to 36" of silt-fence fabric should remain exposed.
Lay the exposed silt fence upslope of the trench to clear an area for driving in the posts.
Just downslope of the trench, drive posts into the ground to a depth of at least 18".
Place posts no more than 4' apart.
Attach the silt fence to the anchored post with staples, wire, zip ties, or nails.

List of common placement/installation mistakes to avoid:

When practicable, do not place silt fence slope barriers across contours. Slope barriers should be placed along contours to avoid a concentration of flow. When the flow concentrates, it overtops the barrier and the silt fence slope barrier quickly deteriorates.
Do not place silt-fence posts on the upslope side of the silt fence fabric. In this configuration, the force of the water is not restricted by the posts, but only by the staples (wire, zip ties, nails, etc.). The silt fence will rip and fail.
Do not place silt fence slope barriers in areas with shallow soils underlain by rock. If the barrier is not sufficiently anchored, it will wash out.
Silt fence slope barriers must be dug into the ground–silt fence at ground level does not work because water will flow underneath.

Inspection and Maintenance:

Silt fence slope barriers should be inspected every 7 days and within 24 hours of a rainfall of 1/2" or more. The following is a list of questions that should be addressed during each inspection:

Are there any points along the slope barrier where water is concentrating?
Does water flow under the slope barrier?
Do the silt fences sag excessively?
Has the silt fence torn or become detached from the posts?
Does sediment need to be removed from behind the slope barrier?

JANUARY 2008			
No.	Revision	By	Date

CITY OF VALLEY CENTER
SEDGWICK COUNTY, KANSAS

SILT FENCE, DITCH CHECK AND BARRIER DETAILS

Professional Engineering Consultants, P.A.
303 S. TOPEKA • WICHITA, KANSAS 67202
316-262-2691 • FAX 316-262-3003

Designed by PEC	Job No.	Sheet	of
Drawn by PEC	Date JULY 2002		

FIGURE IV-5

Saved 04-04-2008 6:28:54 AM by RFJ
Plot Scale 1:2.1495 04-04-2008 6:46:21 AM by RFJ
Q:\1989\89355\001\2008 Updates\Figure IV-05

NOTE: Point A must be higher than Point B so that water flows over the bales and not around them.

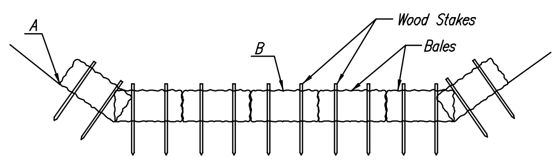

STRAW BALE DITCH CHECKS

Material Specification:

Bale ditch checks may be constructed of wheat straw, oat straw, prairie hay, or bromegrass hay that is free of weeds declared noxious by the Kansas State Board of Agriculture.
The stakes used to anchor the bales should be a hardwood material with the following minimum dimensions: 2" square (nominal) by 4' long.
Optional: The downstream scour apron should be constructed of a double-netted straw erosion-control blanket at least 6' wide.
Optional: The metal landscape staples used to anchor the erosion-control blanket should be at least 8" long.

Placement:

Bale ditch checks should be placed perpendicular to the flowline of the ditch.
The ditch check should extend far enough so that the ground level at the ends of the check is higher than the top of the lowest center bale. This prevents water from flowing around the check.
Straw bale ditch checks should not be placed in ditches where high flows are expected. Rock checks should be used instead.
Bales should be placed in ditches with slopes of 6% or less. For slopes steeper than 6%, rock checks should be used.
The following table provides check spacing for a given ditch grade:

Ditch Check Spacing

Ditch grade (%)	Check Spacing (feet)
0.5	200
1.0	200
2.0	100
3.0	65
4.0	50
5.0	40
6.0	30

Proper installation method:

Excavate a trench perpendicular to the ditch flowline that is 4" deep and a bale's width wide. Extend the trench in a straight line along the entire length of the proposed ditch check. Place the soil on the upstream side of the trench–it will be used later.
Optional: On the downstream side of the trench, roll out a length of erosion-control blanket (scour apron) equal to the length of the trench. Place the upstream edge of the erosion-control blanket along the bottom upstream edge of the trench. The erosion control blanket should be anchored in the trench with one row of 8" landscape staples placed on 18" centers. The remainder of the erosion-control blanket (the portion that is not lying in the trench) will serve as the downstream scour apron. This section of the blanket should be anchored to the ground with 8" landscape staples placed around the perimeter of the blanket on 18" centers. The remainder of the blanket should be anchored using two evenly spaced rows of 8" landscape staples on 18" centers placed perpendicular to the flowline of the ditch.
Place the bales in the trench, making sure that they are butted tightly. Two stakes should be driven through each bale along the centerline of the ditch check, approximately 6" to 8" in from the bale ends. Stakes should be driven at least 12" into the ground.
Once all the bales have been installed and anchored, place the excavated soil against the upstream side of the check and compact it. The compacted soil should be no more than 3" to 4" deep and extend upstream no more than 24".

List of common placement/installation mistakes to avoid:

Do not place a bale ditch check directly in front of a culvert outlet. It will not stand up to the concentrated flow.
Do not place bale ditch checks in ditches that will likely experience high flows. They will not stand up to concentrated flow.
Follow prescribed ditch-check spacing guidelines. If spacing guidelines are exceeded, erosion will occur between the ditch checks.
Do not allow water to flow around the ditch check. Make sure that the ditch check is long enough so that the ground level at the ends of the check is higher than the top of the lowest center bale.
Do not place bale ditch checks in channels with shallow soils underlain by rock. If the check is not anchored sufficiently, it will wash out.
Bale ditch checks must be dug into the ground. Bales at ground level do not work because they allow water to flow under the check.

Inspection and Maintenance:

Bale ditch checks should be inspected every 7 days and within 24 hours of a rainfall of 1/2" or more. The following is a list of questions that should be addressed during each inspection:

Does water flow around the ditch check?
Does water flow under the ditch check?
Does water flow through spaces between abutting bales?
Are any bales and/or scour aprons (optional) dislodged?
Are bales decomposing due to age and/or water damage?
Does sediment need to be removed from behind the ditch check?

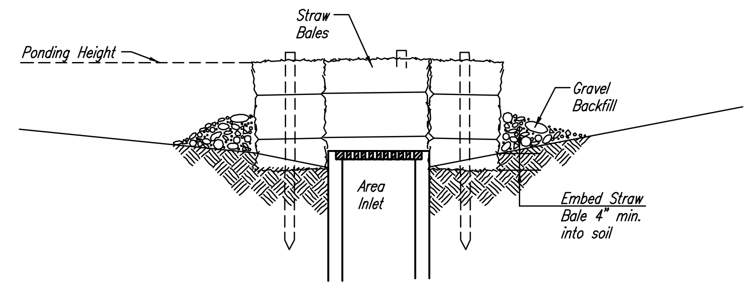

SECTION A-A

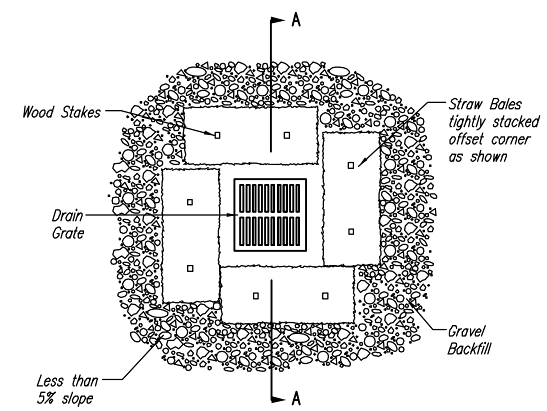

STRAW BALE BARRIERS FOR AREA INLETS
(INLET PROTECTION)

Material Specification:

Bale area inlet barriers should be constructed of wheat straw, oat straw, prairie hay, or bromegrass hay that is free of weeds declared noxious by the Kansas State Board of Agriculture.
The stakes used to anchor the bales should be a hardwood material with the following minimum dimensions: 2" square (nominal) by 4' long.
Twine should be used to bind bales. The use of wire binding is prohibited because it does not biodegrade readily.

Placement:

Bale area inlet barriers should be placed directly around the perimeter of a drop inlet.
When a bale area inlet barrier is located near an inlet that has steep approach slopes, the storage capacity behind the barrier is drastically reduced. Timely removal of sediment must occur for a barrier to operate properly in this location.

Proper Installation Method:

Excavate a trench around the perimeter of the area inlet that is at least 4" deep by a bale's width wide.
Place the bales in the trench, making sure that they are butted tightly. Some bales may need to be shortened to fit into the trench around the area inlet. Two stakes should be driven through each bale, approximately 6" to 8" in from the bale ends.
Stakes should be driven at least 12" into the ground.
Once all the bales have been installed and anchored, place the excavated soil against the receiving side of the barrier and compact it. The compacted soil should be no more than 3" to 4" deep.
Note: When a bale area inlet barrier is placed in a shallow median ditch, make sure that the top of the barrier is not higher than the paved road. In this configuration, water may spread onto the roadway causing a hazardous condition.

List of common placement installation mistakes to avoid:

Bales should be placed directly against the perimeter of the area inlet. This allows overtopping water to flow directly into the inlet instead of onto nearby soil causing scour.
Bale area inlet barriers must be dug into the ground. Bales at ground level do not work because they allow water to flow under the barrier.

Inspection and Maintenance:

Bale area inlet barriers should be inspected every 7 days and within 24 hours of a rainfall 1/2" or more. The following is a list of questions that should be addressed during each inspection:

Does water flow under the area inlet barrier?
Does water flow through spaces between abutting bales?
Are any bales dislodged?
Are bales decomposing due to age and/or water damage?
Does sediment need to be removed from behind the area inlet barrier?

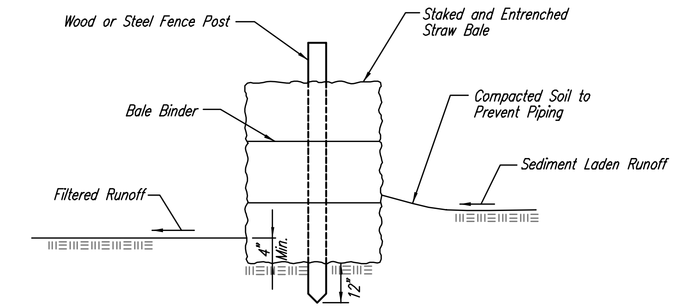

STRAW BALE BARRIERS

Material Specification:

Bale slope barriers may be constructed of wheat straw, oat straw, prairie hay, or bromegrass hay that is free of weeds declared noxious by the Kansas State Board of Agriculture.
The stakes used to anchor the bales should be a hardwood material with the following minimum dimensions: 2" square (nominal) by 4' long.
Twine should be used to bind bales. The use of wire binding is prohibited because it does not biodegrade readily.

Placement:

A slope barrier should be used at the toe of a slope when a ditch does not exist. The slope barrier should be placed on nearly level ground 5' to 10' away from the toe of a slope. The barrier is placed away from the toe of the slope to provide adequate storage for settling out sediment.
When practicable, bale slope barriers should be placed along contours to avoid a concentration of flow.
Bale slope barriers can also be placed along right-of-way fence lines to keep sediment from crossing onto adjacent property. When placed in this manner, the slope barrier will not likely follow contours.

Proper installation method:

Excavate a trench the length of the planned slope barrier that is 4" deep and a bale's width wide. Make sure that the trench is excavated along a single contour. When practicable, slope barriers should be placed along contours to avoid a concentration of flow. Place the soil on the upslope side of the trench for later use.
Place the bales in the trench, making sure that they are butted tightly. Two stakes should be driven through each bale along the centerline of the ditch check, approximately 6" to 8" in from the bale ends. Stakes should be driven at least 12" into the ground.
Once all the bales have been installed and anchored, place the excavated soil against the upslope side of the check and compact it. The compacted soil should be no more than 3" to 4" deep.

List of common placement/installation mistakes to avoid:

When practical, do not place bale slope barriers across contours. Slope barriers should be placed along contours to avoid a concentration of flow. Concentrated flow over a slope barrier creates a scour hole on the downslope side of the barrier. The scour hole eventually undermines the bales and the barrier fails.
Do not place bale slope barriers in areas with shallow soils underlain by rock. If the barrier is not anchored sufficiently, it will wash out.
Bale slope barriers must be dug into the ground. Bales at ground level do not work because they allow water to flow under the barrier.

Inspection and Maintenance:

Bale slope barriers should be inspected every 7 days and within 24 hours of a rainfall of 1/2" or more. The following is a list of questions that should be addressed during each inspection:

Are there any points along the slope barrier where water is concentrating?
Does water flow under the slope barrier?
Does water flow through spaces between abutting bales?
Are any bales dislodged?
Are bales decomposing due to age and/or water damage?
Does sediment need to be removed from behind the slope barrier?

JANUARY 2008

No.	Revision	By	Date

CITY OF VALLEY CENTER
SEDGWICK COUNTY, KANSAS

STRAW BALE, DITCH CHECK AND BARRIER DETAILS

Professional Engineering Consultants, P.A.
303 S. TOPEKA • WICHITA, KANSAS 67202
316-262-2691 • FAX 316-262-3003

Designed by	PEC	Job No.	
Drawn by	PEC	Date	JULY 2002

Sheet of

FIGURE IV-6

SECTION V. WATER SYSTEM CRITERIA

A. General

Design of water systems shall meet the Policies, General Considerations, and Design Requirements for Public Water Systems in Kansas, as established by the Kansas Department of Health and Environment (KDHE) and shall also meet the requirements of the City of Valley Center Design Standards as herein outlined. Prior to submittal to KDHE, the designer shall provide the City with two sets of Office Copy plans for review and comment. The designer shall submit a Public Water Supply Permit along with plans, specifications, and two extra plan and specification covers to KDHE and must obtain approval prior to the bid letting. The requirement of submitting a Public Water Supply Permit may be waived by KDHE for projects with less than 5,280 feet of total length of waterline.

B. Waterline Materials and Design

Approved pipe material for use on waterlines shall include Ductile Iron Pipe (DIP) and PVC.

1. Ductile Iron Pipe - DIP shall be minimum Pressure Class 350 and shall be cement lined and seal coated with an approved bituminous seal coat in accordance with AWWA C-104.

2. PVC Pipe - PVC pipe 4" and larger shall be AWWA C-900, DR 18 pipe. Fittings for use with DIP or PVC pipe shall be CICL or DICL conforming to AWWA C110. Compact fittings may be used, conforming to AWWA C153.

3. Design Considerations - The minimum depth of cover for all waterlines shall be 42". Minor deflections of PVC pipe shall be made through the use of couplings. The maximum deflection shall not exceed 4º. High points in the profile of waterlines shall be minimized. High points shall be located where fire hydrants or other outlets are located. Detectable metallic tape shall be placed over all waterlines constructed. The tape shall be blue with a warning message of "CAUTION BURIED WATERLINE BELOW" being included on the tape. All waterlines shall include the use of tracer wire, as shown in Figure V-1.

4. Waterline Sizing - Waterlines shall be sized based on peak demands from the service area. Minimum diameter of public waterlines will be 8", unless otherwise approved by the City. 4" or 6" diameter waterlines may be used at cul-de-sacs if looped around cul-de-sac and a fire hydrant is not required. Waterlines serving fire hydrants or fire protection systems shall be a minimum of 8" in diameter.

5. Waterline Location - Waterlines shall typically have an 8' offset off property lines, and shall be located within public street right-of-way. If required, easements shall be obtained for installation and maintenance purposes. Any waterline locations which are not in public street right-of-way shall be approved by the City.

   Waterlines shall typically be located on the north and east portions of right-of-ways and easements.

6. Testing - All completed waterlines shall be subjected to a pressure and leakage test. The pressure test consists of the waterline being subjected to the rated working pressure of the pipe installed (typically 150 psi) for a period of 1 hour. A two-hour leakage test will follow the pressure test. An approved leakage test will consist of an allowable leakage quantity not being exceeding in the two hour time period. The allowable leakage is calculated based on the following equation:

   $L = 0.0001351 (N) (D) (P)^{1/2}$
   L = Allowable Leakage (gal/hr)
   D = Nominal Pipe Diameter (in)
   P = Pressure (PSIG)
   N = Number of Joints in Tested Section

   All water used in flushing or other construction shall be metered and the total water used shall be submitted to the City.

7. Disinfection - All completed waterlines shall be flushed and disinfected per AWWA C601. Waterlines shall be disinfected by the "continuous feed" method. A chlorine concentration of 50 mg/l shall be introduced into the newly constructed waterline. The chlorinated water shall remain in the waterline for a 24-hour period. At the end of the 24-hour period, the residual chlorine concentration shall be 25 mg/l (minimum). The waterlines shall then be flushed so the final chlorine concentration in the waterline is less than 1 mg/L.

8. Backflow devices will be required for all fire protection and shall flow current ordinances in place by the City of Valley Center.

C. <u>Trench and Backfill Requirements - (See Figure IV-1)</u>

Approved material includes UD-1 meeting KDOT Standard Specifications or ASTM C-33 Size No. 67 crushed rock (granular) material. Approved backfill material includes approved granular material (sand) free from debris, organic material and stones with 100% passing thru 3/4" sieve or compacted earth.

1. Trenching through Pavement - Pavement shall be saw cut in a neat line and replaced to a depth of 1 1/3 times the original pavement thickness. The replaced pavement shall be widened a minimum of 12" each way from the trench limits.

2. Backfilling Under Pavement - Pavement backfill material shall be compacted sand or excavatable flowable fill. The material shall be backfilled to a level 2' from the bottom of pavement.

3. Pipe Zone Backfilling. Class B bedding shall be used for flexible pipe. Class C bedding shall be used for rigid pipe. If wet conditions are encountered, Class B or C improved bedding shall be utilized.

4. Protection Fill - (See Figure V-1) Protective fill shall be provided during construction where the cover over the proposed waterline is less than 2 feet.

   Protective fill shall be placed and compacted in place prior to construction of the waterline. The completed waterline shall have a minimum cover of 42".

D. Fire Hydrants, Valves and Appurtenances

Waterline fire hydrants, valves, appurtenances shall meet all requirements as established by AWWA, and as set forth in the City of Valley Center Design Standards as herein outlined.

1. Fire Hydrants Assembly - (Figure V-1)
   Fire hydrants shall be Clow Medallion F-2545. The fire hydrant assembly shall include an MJ Anchor Tee, 6" MJ Gate Valve, 6" Valve box, and a variable length of 6" DICL. Fire hydrant spacing shall be a maximum of 400'. Fire hydrants shall be located near intersections and at 5-foot offsets from property lines.

2. Valves - (Figure V-1)
   Resilient Seat Gate Valves meeting AWWA C509 with a non-rising stem and square operating nut shall be furnished for use on 12" waterlines and smaller. Gate valves shall be as manufactured by Clow. Valves greater than 12" shall be Butterfly valves meeting AWWA C504, as manufactured by Clow.

   Anchored valve assemblies shall include the use of an MJ Anchor Coupling for pipes 12" and smaller. For larger pipes, restrained joints shall be used as thrust restraint for the anchored valve.

3. Valve Boxes - (Figure V-1)
Valve boxes shall be cast iron with lock type cover extension with a screw type adjustment. Valve boxes shall be 4" diameter with a flared base. Wall thickness shall be 3/16" thick. Valve box tops shall be set flush with proposed grade. A 3' square concrete pad shall be placed around a valve box in undeveloped areas.

4. Flushing Hydrant - (Figure V-1)
Flushing hydrant assemblies shall be provided at the end of waterlines with prior approval from the City. The designer shall minimize the use of blow off assemblies by installation of fire hydrants in locations that will require air release or flushing of the waterlines in lieu of blow off assemblies.

E. Protection of Water Supplies

Waterlines laid parallel to sanitary sewers shall maintain a minimum horizontal distance of 10 feet between the sanitary sewer and waterlines. When a waterline and sanitary sewer cross and the sanitary sewer is 2 feet or more below the waterline, no special attention is needed. At all other crossings, the waterline shall be constructed of an approved pipe material with gasketed joints. One full-length pipe section shall be centered at the sanitary sewer.

F. Thrust Blocks - (See Figure V-1)

All plugs, caps, tees, and bends deflecting 11 1/4º or more shall be provided with thrust restraint. The approved method for thrust restraint will be through the use of concrete reaction backing. The concrete reaction backing shall be placed between undisturbed earth and the fitting to be restrained. The thrust restraint shall be designed to overcome the resultant force at the fitting at the test pressure of the pipe or the surge pressure, whichever is greater. As an alternate, other restraint methods may be used with prior approval from the City.

G. Erosion Control and Sediment Barriers - (See Figure V-2)

H. Water Services

Water services shall be provided for all lots that are to be serviced. All taps to water mains shall be performed with a service saddle and corporation stops. Waterlines service material shall be Polyethylene. Meter setters and meter boxes shall be provided, with meters being furnished by the City Water Department for installation. Meter boxes shall be installed 6' off the right-of-way line, within the right-of-way. Meter boxes shall typically be set 2' off of lot lines. Service lines shall typically be 3/4" or 1" for residential lots (services will be sized by the City). Water services shall be bid as long services (greater than 10') or short services (less than 10').

1. Materials - The following materials and manufacturers shall apply to water service materials.

a. Corporation Stops - AWWA Threads
Manufacturer - McDonald or Mueller

b. Service Saddles - Required on all water main taps.
Bronze with silicon bronze straps double straps and Bronze nuts or 18-8 stainless steel.
Manufacturer – Smith Blair

c. Service Tubing - AWWA 7-S-CR
PE pipe.

d. Unions and Couplings-Manufacturer - McDonald or Mueller.

e. Copper Setters - Manufactured for connection to copper tubing.
Provide 9" long plastic nipple installed between meter coupling nuts.
Provide 15" long outlet leg extension.
Manufacturer - McDonald
3/4" - 60-212WXTD33X15
1" - 60-412WXTD44X15

f. Meter Boxes - ASTM D1784

Size	3/4"	1"	1-1/4"	1-1/2"
Diameter	18"	21"	36"	36"
Height	30"	30"	30"	30"
	Slotted	Slotted	Slotted	Slotted
If 2" or larger, Vault is required				

g. Meter Rings and Lids- Cast Iron
Manufacturer – Clay/Bailey

h. Meters - All meters shall be radio read meters and will be provided by the City of Valley Center.

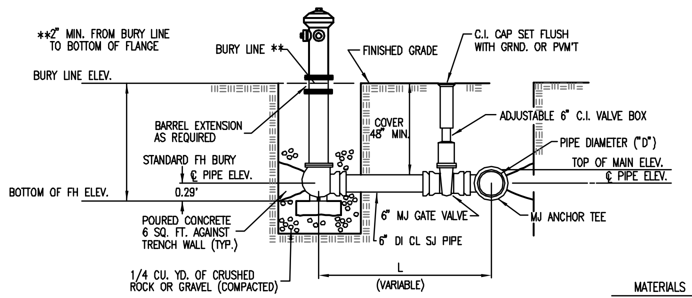

MATERIALS

1 – MJ Anchor Tee ("D"x 6")
1 – 6" MJ Gate Valve
1 – 6" Valve Box
– 6" DI CL SJ Pipe
1 – Fire Hydrant
Concrete Blocking (As required)

FIRE HYDRANT ASSEMBLY

NOTE: ALL BLOCKING TO BE POURED CONCRETE CLASS II

FIRE HYDRANTS REQUIRED				
LINE NO.	STATION	BURY LINE ELEVATION	TOP OF PIPE ELEVATION	FIRE HYDRANT BURY REQUIRED

* THE CONTRACTOR SHALL USE STANDARD 4.5' OR 5' FIRE HYDRANT WITH HYDRANT BARREL EXTENSIONS AS REQUIRED.

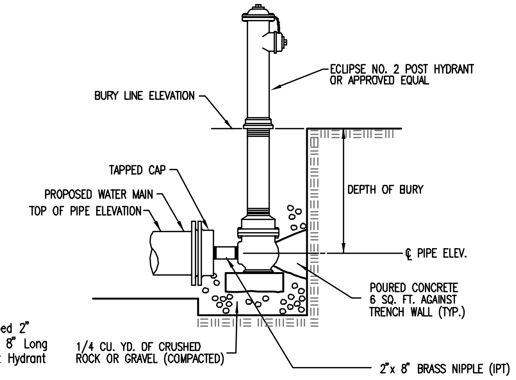

MATERIALS

1 – CI MJ Cap – Tapped 2"
1 – 2" Brass Nipple – 8" Long
1 – Eclipse No. 2 Post Hydrant or approved equal
Concrete Blocking (As required)

FLUSHING HYDRANT ASSEMBLY

FLUSHING HYDRANTS REQUIRED				
LINE NO.	STATION	BURY LINE ELEVATION	TOP OF PIPE ELEVATION	DEPTH OF BURY REQUIRED

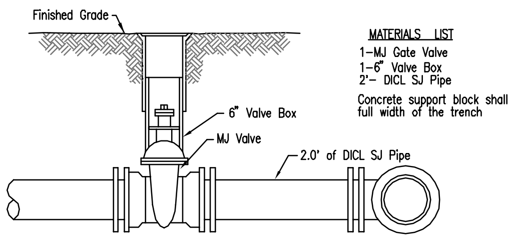

MATERIALS LIST

1–MJ Gate Valve
1–6" Valve Box
2'– DICL SJ Pipe
Concrete support block shall be full width of the trench

VALVE ASSEMBLY

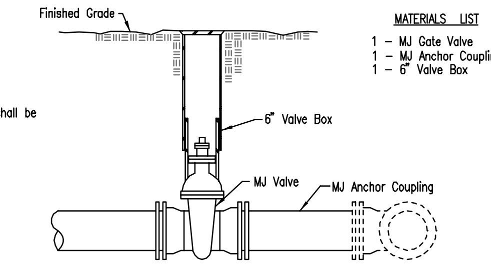

MATERIALS LIST

1 – MJ Gate Valve
1 – MJ Anchor Coupling
1 – 6" Valve Box

ANCHORED VALVE ASSEMBLY

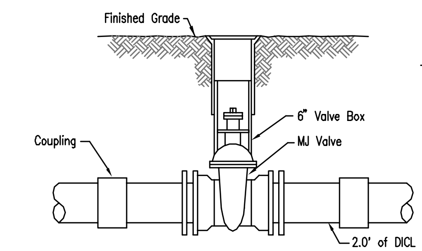

MATERIALS LIST

1–MJ Gate Valve
1–6" Valve Box
2–Couplings
2–Short pcs. (DICL SJ Pipe)
Concrete support block shall be full width of the trench

LINE VALVE ASSEMBLY

MATERIALS LIST

1–MJ GATE OR BUTTERFLY VALVE (AS PER PLAN)
1–CIMJ CAP WHEN NECESSARY
1–6" VALVE BOX
20' OF PIPE (BID WITH PIPE)
2 – #6 REINF. BARS
CONCRETE SUPPORT BLOCK SHALL BE FULL WIDTH OF THE TRENCH

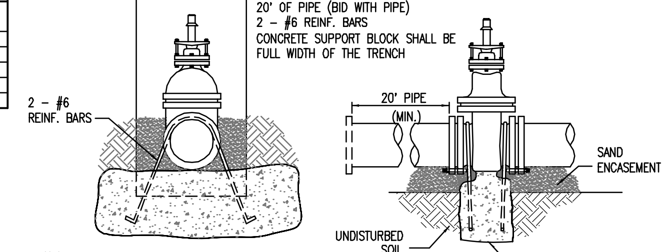

Notes:
1. Concrete Block at Valve to have sufficient bearing in undisturbed soil to prevent thrust movement as shown in table at right. Field Engineer to determine thrust loading of undisturbed soil and final size of thrust block.

2. The thrust block shall be constructed such that bolts, nuts, and other MJ accessories are kept clear of concrete.

3. All valves at dead ends and at other locations as called out on the plans shall be blocked as shown here.

THRUST AT VALVES	
VALVE	THRUST AT 150 #/in²
4"	1809 lbs.
6"	4245 lbs.
8"	7540 lbs.
12"	16965 lbs.

ANCHORED VALVE ASSEMBLY, SPECIAL

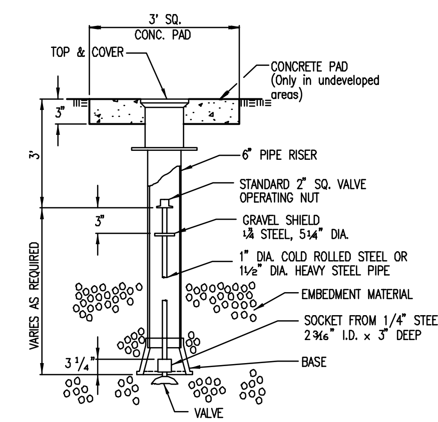

VALVE BOX DETAIL

NOTE: ONE VALVE STEM REQUIRED FOR EACH BURIED VALVE

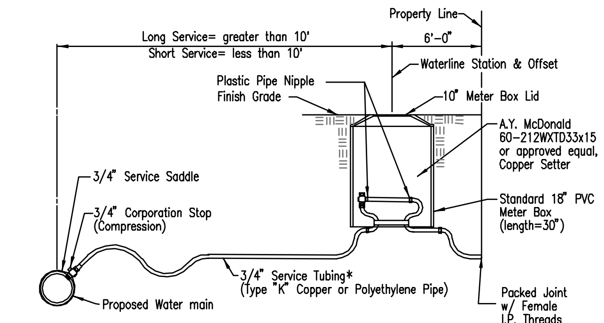

STANDARD 18" METER BOX

NEW METERS WILL BE FURNISHED BY THE CITY TO BE INSTALLED BY THE CONTRACTOR
* IF 1" SERVICE LINE, USE STANDARD 21" PVC METER BOX.

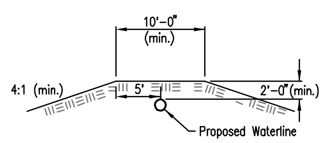

PROTECTIVE FILL DETAIL

Minimum protective fill shall be provided in all instances where cover over the proposed waterline is less than two (2) Feet. (Cost subsidiary to pipe installation).

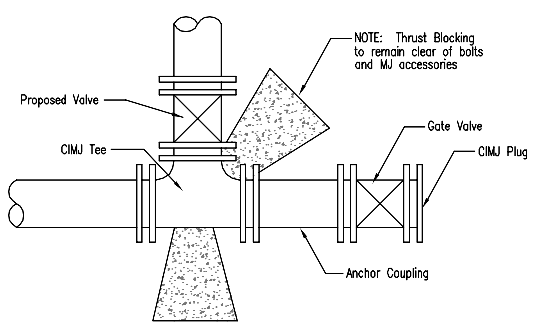

KEY BLOCK DETAIL

WATER SERVICE CONNECTION SCHEDULE					
TO SERVE LOT, BLOCK	TAP LOCATION WATERLINE NO.	STATION	METER BOX LOCATION	TOP ELEV.	APPROXIMATE 3/4" SERVICE LINE REQUIRED (FT.)
TOTAL METER BOXES =				APPROX.. TOTAL =	

See this Sheet for Water Meter Box and Service Detail

Services will be bid on a per each basis for long and short services.
Long Service line length is greater than 10'.
Short Service line length is less than 10'.

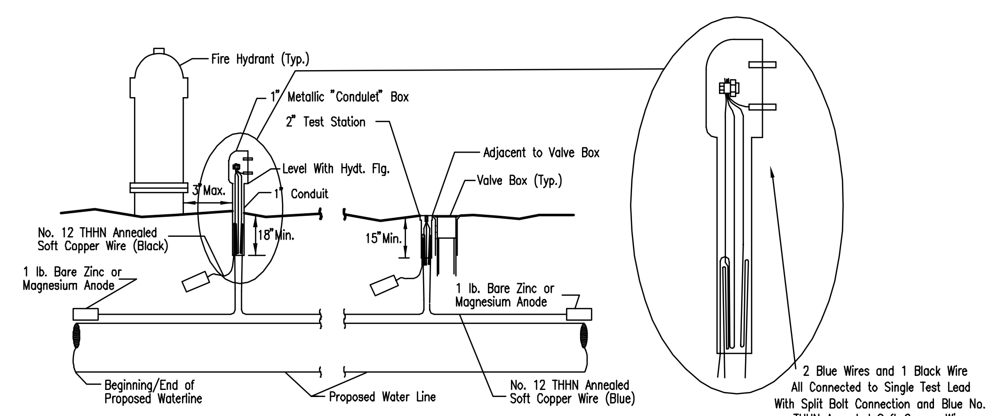

TRACER WIRE
Conductive type pipe locator/tracer wire shall be installed to locate Polyvinyl Chloride (PVC) or any nonmetallic waterline pipes. The wire shall extend the entire length of the proposed pipe. The wire shall be taped to the waterline and pulled with the pipe. Split–bolt connectors shall be used at splice locations. Electrical tape shall cover all splices so no bare wire is exposed. Test stations shall be installed adjacent to all fire hydrants along the waterline and at blowoffs or valves near the ends of the waterlines. Any exceptions to the location of test stations shall be approved by the engineer. At each test station, the tracer wire shall be connected to a 1 lb. Zinc or magnesium anode. Anodes shall also be attached to the tracer wire at both the beginning and the end of the proposed waterline. A typical layout of the tracer wire and test station is provided in the above figure.

WIRE
The tracer wire shall be Blue No. 12 THHN annealed soft copper wire with thermal plastic insulation. The insulation shall be heat, oil, and gasoline resistant as manufactured by Temple Electric or approved equal. To allow for grade adjustment, a minimum of 12" of excess wire shall be coiled at the bottom of the test station for all wires. The insulation sheathing shall be removed such that 1" bare copper wire is exposed at all points of connection. Contractor shall attach wire being installed with proposed water main to any tracer wire installed with adjacent waterline projects.

TEST STATIONS
The test station for fire hydrant applications shall be a 1 inch galvanized "condulet" style test station as manufactured by AGRA Industries or approved equal with a removal solid cover having two leads extending from the face or approved equal. The test station for valve applications shall be 2 inch flush style test station T2PS3B as manufactured by HANDLEY Industries or approved equal. The "condulet" style test station shall be attached to a 1 inch rigid galvanized conduit with a minimum length of 36" and plastic end bushing. The flush style shall have the word "WATER" stamped or molded into the lid. All test stations shall be manufactured using molded blue tops or sufficiently coated with blue enamel paint. The tracer wire and the anode wire shall be installed to allow 10 inches of wire within the test station. In concrete environments such as sidewalks or in the downtown area the contractor shall use the flush style test station. The location of all test stations shall be approved by the engineer, recorded, and shown in the as–built drawings.

ANODES
The anodes shall be 1 lb. bare zinc or magnesium. The anodes shall be buried at the same elevation as the waterline at each test station. The anodes shall be connected to Black No. 12 THHN annealed soft copper wire which shall be extended to the test station.

TRACER WIRE DETAIL

Cost is Subsidiary to Pipe Installation

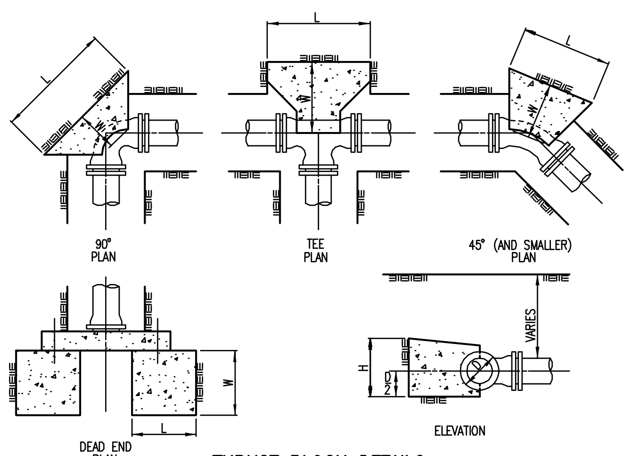

THRUST BLOCK DETAILS

THRUST BLOCK SCHEDULE				
LINE SIZE	FITTINGS & ANGLE	DIM. L	DIM. W	DIM. H

No.	Revision	By	Date

JANUARY 2008

CITY OF VALLEY CENTER
SEDGWICK COUNTY, KANSAS

WATERLINE DETAILS

Professional Engineering Consultants, P.A.
303 S. TOPEKA • WICHITA, KANSAS 67202
316-262-2691 • FAX 316-262-3003

Designed by	PEC	Job No.		Sheet of
Drawn by	PEC	Date	JULY 2002	

FIGURE V–1

Saved 04–04–2008 6:28:34 AM by RFJ
Plot Scale 1:2.1493 04–04–2008 6:45:13 AM
Q:\1989\89350\001\2008 Updates\Figure V–01
by RFJ